DIST	COUNTY	ROUTE	POST MILE OF PROJECT	SHEET No.	TOTAL SHEETS
05	SCr	EUREKA CANYON RD	P.M. 3.16 TO P.M. 5.33	1	51

INDEX OF SHEETS

THE LISTING OF THE INDEX OF SHEETS IS SHOWN ON THE INDEX OF PLANS SHEET

GENERAL NOTES

1. ALL CONSTRUCTION SHALL CONFORM TO THE COUNTY OF SANTA CRUZ DESIGN CRITERIA, THE STATE STANDARD PLANS AND THE APPLICABLE PROVISIONS OF THE STATE STANDARD SPECIFICATIONS.
2. THERE SHALL BE NO CHANGES IN THE APPROVED IMPROVEMENT PLANS WITHOUT PRIOR APPROVAL BY THE SANTA CRUZ COUNTY DEPARTMENT OF PUBLIC WORKS.
3. PLEASE CALL "UNDERGROUND SERVICE ALERT" (U.S.A.) AT 811 or 800-227-2600 BEFORE DIGGING.
4. THE ENGINEER PREPARING THESE PLANS WILL NOT BE RESPONSIBLE FOR, OR LIABLE FOR, UNAUTHORIZED CHANGES TO OR USES OF THESE PLANS. ALL CHANGES TO THE PLANS MUST BE APPROVED BY TRANSPORTATION ENGINEERING.
5. THE CONSTRUCTION CONTRACTOR AGREES THAT IN ACCORDANCE WITH GENERALLY ACCEPTED CONSTRUCTION PRACTICES, CONSTRUCTION CONTRACTOR WILL BE REQUIRED TO ASSUME SOLE AND COMPLETE RESPONSIBILITY FOR JOB SITE CONDITIONS DURING THE COURSE OF CONSTRUCTION OF THE PROJECT, INCLUDING SAFETY OF ALL PERSONS AND PROPERTY; THAT THIS REQUIREMENT SHALL BE MADE TO APPLY CONTINUOUSLY AND NOT BE LIMITED TO NORMAL WORKING HOURS, AND CONSTRUCTION CONTRACTOR FURTHER AGREES TO DEFEND, INDEMNIFY, AND HOLD DESIGN PROFESSIONAL HARMLESS FROM ANY AND ALL LIABILITY, REAL OR ALLEGED, IN CONNECTION WITH THE PERFORMANCE OF WORK ON THIS PROJECT, EXCEPTING LIABILITY ARISING FROM THE SOLE NEGLIGENCE OF DESIGN PROFESSIONAL.
6. THE CONTRACTOR SHALL POSSESS A CLASS "A" LICENSE AT THE TIME THE CONTRACT IS AWARDED.

ABBREVIATIONS

THE LISTING OF THE ABBREVIATIONS IS SHOWN ON THE INDEX OF PLANS SHEET

COUNTY OF SANTA CRUZ
DEPARTMENT OF PUBLIC WORKS

PROJECT PLANS FOR CONSTRUCTION ON
EUREKA CANYON ROAD
PM 3.16, PM 3.36, PM 4.67, PM 5.05, PM 5.33
STORM DAMAGE REPAIR PROJECT

FEDERAL PROJECT No.
32LO(048), 32LO(052), 32LO(257), 32LO(229), 32LO(345)

To be supplemented by CalTrans Standard Plans dated 2024

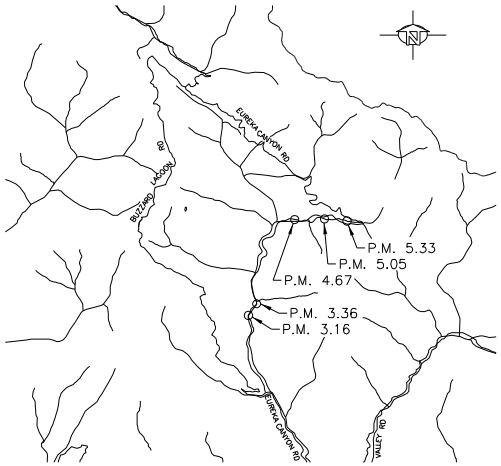

VICINITY MAP
NOT TO SCALE

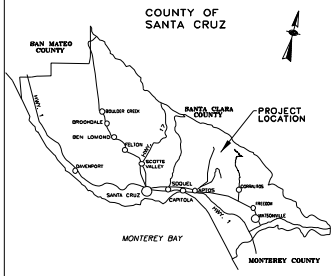

LOCATION MAP

DOKKEN ENGINEERING
110 Blue Ravine Road, Suite 200
Folsom, CA 95630
Ph: 916-858-0642 Fax: 916-858-0643

Project Engineer
Rosa Griggs

REGISTERED PROFESSIONAL ENGINEER
ROSA GRIGGS
No. 54188
Exp. 12-31-25
CIVIL
STATE OF CALIFORNIA

Civil Engineer in Responsible Charge
Amber Myer

Senior Design Engineer
Joel LaCagnina

Assistant Director of Public Works
Transportation Division
Steve Wiesner

Director of Public Works
Matthew J. Machado

Chair, Board of Supervisors

Date approved by Board of Supervisors

Reviewed by:		Reviewed by:		Reviewed by:	
GREG MARTIN Traffic Engineer		ALEX SANDOVAL Road Superintendent		CARISA DURAN Construction Engineer	

County Job No. P76519, P76520, P76779, P76713, P76732

The County or its officers or agents
shall not be responsible for the accuracy or
completeness of electronic copies of this plan sheet.

ABBREVIATIONS

AB	AGGREGATE BASE	MGS	MIDWEST GUARDRAIL SYSTEM
AP	ANGLE POINT	Min	MINIMUM
BC	BEGIN CURVE	MSE	MECHANICALLY STABILIZED EARTH
BEG/Beg	BEGIN	N	NORTH
BVC	BEGIN VERTICAL CURVE	NAD83	NORTH AMERICAN DATUM 1983
CL	CENTER LINE	NAVD88	NORTH AMERICAN VERTICAL DATUM 1988
CP	CATCH POINT/CONTROL POINT	OG	ORIGINAL GROUND
CSP	CORRUGATED STEEL PIPE	PCC	POINT OF COMPOUNDING CURVE
Dia	DIAMETER	PG	PROFILE GRADE
E	EAST	PI	POINT OF INTERSECTION
(E)/Exist	EXISTING	P/L	PROPERTY LINE
EC	END CURVE	PRC	POINT OF REVERSING CURVE
Elev	ELEVATION	PT	POINT
EP	EDGE OF PAVEMENT	RSP	ROCK SLOPE PROTECTION
ETW	EDGE OF TRAVELED WAY	RT/Rt	RIGHT
EVC	END VERTICAL CURVE	R/W	RIGHT OF WAY
FES	FLARED END SECTION	RW	RETAINING WALL
FG	FINISH GRADE	RWLOL	RETAINING WALL LAYOUT LINE
FL	FLOW LINE	S	SOUTH
FT	FEET	Std	STANDARD
HMA	HOT MIX ASPHALT	TCE	TEMPORARY CONSTRUCTION EASEMENT
HP	HINGE POINT	Temp	TEMPORARY
LT/Lt	LEFT	Var	VARIES
LOL	LAYOUT LINE	VC	VERTICAL CURVE
(MOD)	MODIFIED	W	WEST

INDEX OF SHEETS

SHEET NO.		DESCRIPTION
1		TITLE SHEET
2	IOP-1	INDEX OF PLANS
3	L-1	LAYOUT - PM 3.16
4	C-1	CONSTRUCTION DETAILS - PM 3.16
5	TH-1	TRAFFIC HANDLING PLAN - PM 3.16
6	Q-1	SUMMARY OF QUANTITIES - PM 3.16
7	PP-1	PLANTING PLAN - PM 3.16
8	EC-1	EROSION CONTROL PLAN - PM 3.16
9	S-1	GENERAL PLAN - PM 3.16
10	S-2	SOLDIER PILE ELEVATION - PM 3.16
11	S-3	TYPICAL SECTION - PM 3.16
12	S-4	RETAINING WALL DETAILS - PM 3.16
13	S-5	TIEBACK DETAILS - PM 3.16
14	S-6	MISCELLANEOUS DETAILS - PM 3.16
15	L-2	LAYOUT - PM 3.36
16	C-2	CONSTRUCTION DETAILS - PM 3.36
17	TH-2	TRAFFIC HANDLING PLAN - PM 3.36
18	Q-2	SUMMARY OF QUANTITIES - PM 3.36
19	PP-2	PLANTING PLAN - PM 3.36
20	EC-2	EROSION CONTROL PLAN - PM 3.36
21	S-7	GENERAL PLAN - PM 3.36
22	S-8	SOLDIER PILE ELEVATION - PM 3.36
23	S-9	SOLDIER PILE DATA TABLES - PM 3.36
24	S-10	TYPICAL SECTION - PM 3.36
25	S-11	RETAINING WALL DETAILS - PM 3.36
26	S-12	TIEBACK DETAILS - PM 3.36
27	S-13	MISCELLANEOUS DETAILS - PM 3.36
28	L-3	LAYOUT - PM 4.67
29	C-3	CONSTRUCTION DETAILS - PM 4.67
30-31	TH-3	TRAFFIC HANDLING PLAN - PM 4.67
32	Q-3	SUMMARY OF QUANTITIES - PM 4.67
33	PP-3	PLANTING PLAN - PM 4.67
34	EC-3	EROSION CONTROL PLAN - PM 4.67
35	S-14	GENERAL PLAN - PM 4.67
36	S-15	CRIB WALL DETAILS - PM 4.67
37	L-4	LAYOUT - PM 5.05
38	C-4	CONSTRUCTION DETAILS - PM 5.05
39-40	TH-4	TRAFFIC HANDLING PLAN - PM 5.05
41	Q-4	SUMMARY OF QUANTITIES - PM 5.05
42	PP-4	PLANTING PLAN - PM 5.05
43	EC-4	EROSION CONTROL PLAN - PM 5.05
44	L-5	LAYOUT - PM 5.33
45	C-5	CONSTRUCTION DETAILS - PM 5.33
46	TH-5	TRAFFIC HANDLING PLAN - PM 5.33
47	Q-5	SUMMARY OF QUANTITIES - PM 5.33
48	PP-5	PLANTING PLAN - PM 5.33
49	EC-5	EROSION CONTROL PLAN - PM 5.33
50	S-16	GENERAL PLAN - PM 5.33
51	S-17	RETAINING WALL DETAILS - PM 5.33

DOKKEN ENGINEERING
110 Blue Ridge, Suite 200
Santa Cruz, CA 95060
Ph: 831.457.0962 Fax: 831.457.0964

INDEX OF PLANS

NO SCALE **IOP-1**

RELATIVE BORDER SCALE IS IN INCHES 0 1 2 3

#FILEABBREV

SHEET NAME:

DRAWING NAME:

DATE	REVISION	BY

PROJECT ENGINEER: ERIC ESPINOZA

COUNTY OF SANTA CRUZ – DEPARTMENT OF PUBLIC WORKS

EUREKA CANYON PM3.16, PM3.36, 4.67, 5.05, & 5.33
STORM DAMAGE REPAIR PROJECT

DRAWN: K. MOE
CHECKED: R. GRIGGS
DATE: 2/20/25
SCALE: AS NOTED
JOB NO.

The County or its officers or agents shall not be responsible for the accuracy or completeness of electronic copies of this plan sheet.

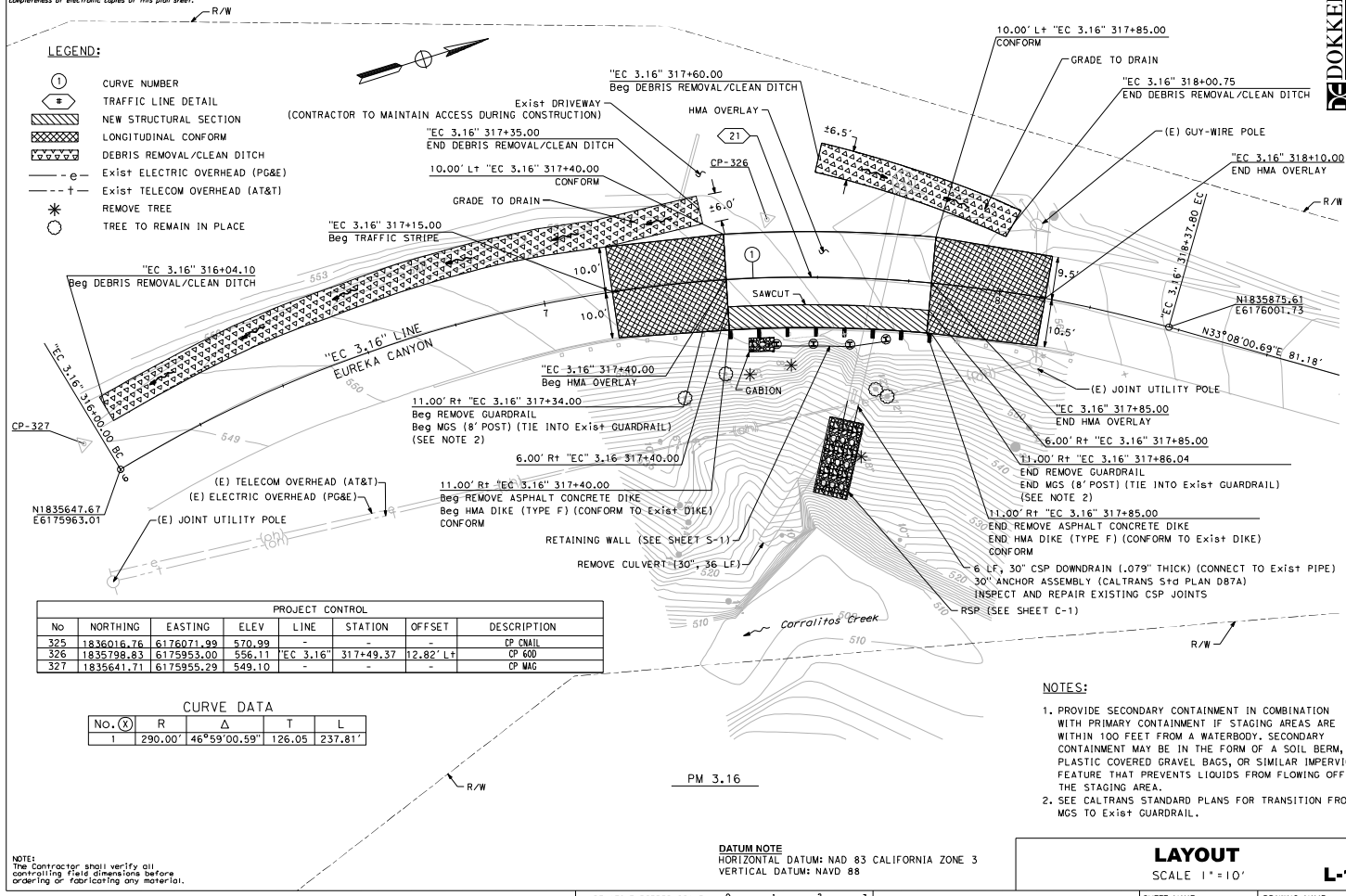

PROJECT CONTROL							
No	NORTHING	EASTING	ELEV	LINE	STATION	OFFSET	DESCRIPTION
325	1836016.76	6176071.99	570.99	-	-	-	CP CNAIL
326	1835798.83	6175953.00	556.11	"EC 3.16"	317+49.37	12.82' L+	CP GOD
327	1835641.71	6175955.29	549.10	-	-	-	CP MAG

CURVE DATA

No. (X)	R	Δ	T	L
1	290.00'	46°59'00.59"	126.05	237.81'

NOTES:

1. PROVIDE SECONDARY CONTAINMENT IN COMBINATION WITH PRIMARY CONTAINMENT IF STAGING AREAS ARE WITHIN 100 FEET FROM A WATERBODY. SECONDARY CONTAINMENT MAY BE IN THE FORM OF A SOIL BERM, PLASTIC COVERED GRAVEL BAGS, OR SIMILAR IMPERVIOUS FEATURE THAT PREVENTS LIQUIDS FROM FLOWING OFF OF THE STAGING AREA.
2. SEE CALTRANS STANDARD PLANS FOR TRANSITION FROM MGS TO Exist GUARDRAIL.

NOTE:
The Contractor shall verify all controlling field dimensions before ordering or fabricating any material.

DATUM NOTE
HORIZONTAL DATUM: NAD 83 CALIFORNIA ZONE 3
VERTICAL DATUM: NAVD 88

LAYOUT

SCALE 1" = 10'

L-1

RELATIVE BORDER SCALE IS IN INCHES 0 1 2 3 | #FILEABBREV | SHEET NAME: | DRAWING NAME:

DOKKEN ENGINEERING
110 Rue Lione Street, Suite 200
Lafayette, LA 70508
Ph: 337.706.0940 Fax: 337.706.0946

DATE	REVISION	BY

PROJECT ENGINEER
ERIC ESPINOZA

COUNTY OF SANTA CRUZ – DEPARTMENT OF PUBLIC WORKS

EUREKA CANYON – PM 3.16
STORM DAMAGE REPAIR PROJECT

DRAWN: K. MOE
CHECKED: R. GRIGGS
DATE: 2/20/25
SCALE: AS NOTED
JOB NO. P76519

The County or its officers or agents shall not be responsible for the accuracy or completeness of electronic copies of this plan sheet.

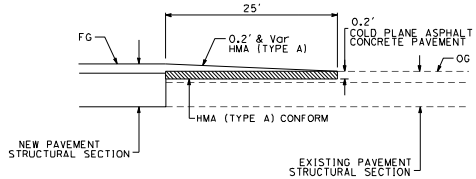

LONGITUDINAL CONFORM DETAIL

LEGEND:

- COLD PLANE ASPHALT CONCRETE PAVEMENT
- ROCK SLOPE PROTECTION

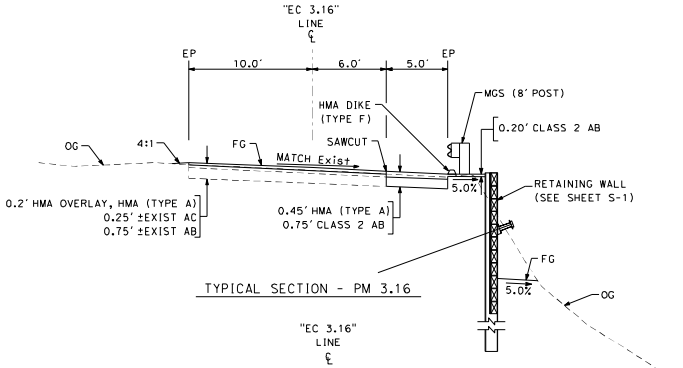

TYPICAL SECTION - PM 3.16

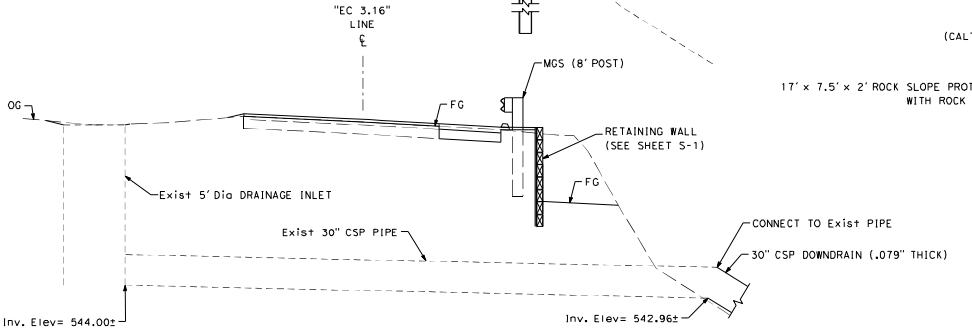

DRAINAGE SECTION - PM 3.16

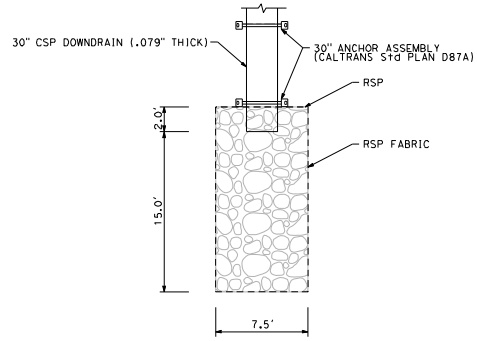

PLAN

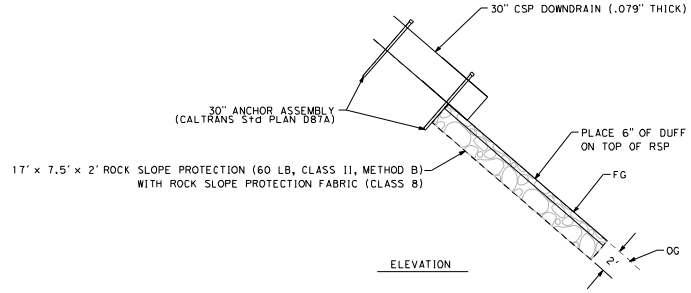

ELEVATION

DOWNDRAIN OUTLET DETAIL

NOTE:
The Contractor shall verify all controlling field dimensions before ordering or fabricating any material.

CONSTRUCTION DETAILS

NO SCALE

C-1

RELATIVE BORDER SCALE IS IN INCHES 0 1 2 3 | #FILEABBREV | SHEET NAME: | DRAWING NAME:

DOKKEN ENGINEERING
110 Blue Ridge Road, Suite 200
Santa Cruz, CA 95060
Ph: 831.457.0962 Fax: 831.457.0963

DATE	REVISION	BY

PROJECT ENGINEER: ERIC ESPINOZA

COUNTY OF SANTA CRUZ - DEPARTMENT OF PUBLIC WORKS

EUREKA CANYON - PM 3.16
STORM DAMAGE REPAIR PROJECT

DRAWN: K. MOE
CHECKED: R. GRIGGS
DATE: 2/20/25
SCALE: AS NOTED
JOB NO. P76519

The County or its officers or agents shall not be responsible for the accuracy or completeness of electronic copies of this plan sheet.

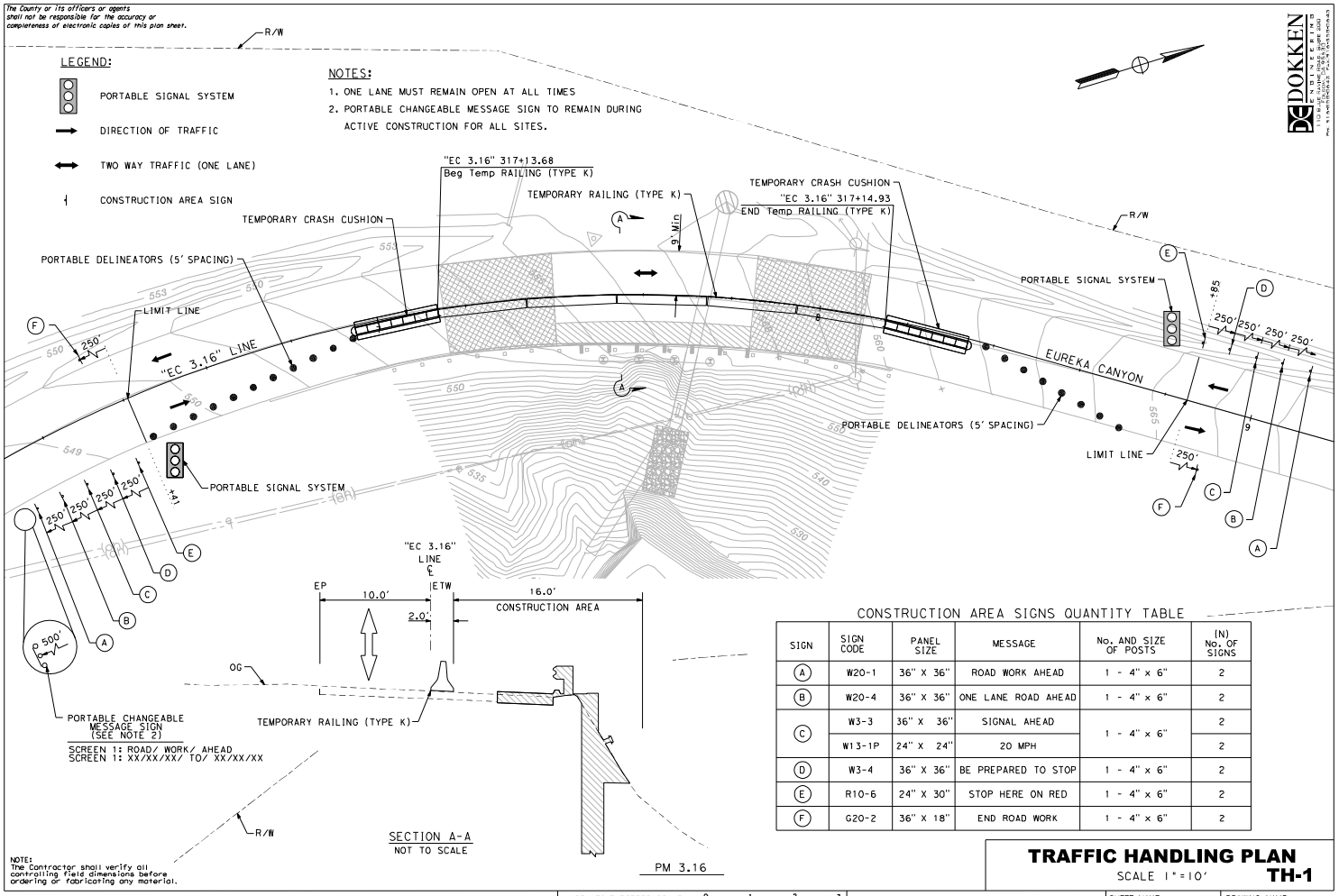

CONSTRUCTION AREA SIGNS QUANTITY TABLE

SIGN	SIGN CODE	PANEL SIZE	MESSAGE	No. AND SIZE OF POSTS	(N) No. OF SIGNS
A	W20-1	36" X 36"	ROAD WORK AHEAD	1 - 4" x 6"	2
B	W20-4	36" X 36"	ONE LANE ROAD AHEAD	1 - 4" x 6"	2
C	W3-3	36" X 36"	SIGNAL AHEAD	1 - 4" x 6"	2
	W13-1P	24" X 24"	20 MPH		2
D	W3-4	36" X 36"	BE PREPARED TO STOP	1 - 4" x 6"	2
E	R10-6	24" X 30"	STOP HERE ON RED	1 - 4" x 6"	2
F	G20-2	36" X 18"	END ROAD WORK	1 - 4" x 6"	2

TRAFFIC HANDLING PLAN

SCALE 1"=10'

TH-1

RELATIVE BORDER SCALE IS IN INCHES 0 1 2 3

#FILEABBREV

SHEET NAME:

DRAWING NAME:

DOKKEN ENGINEERING
110 Rue Cuyler, Suite 200
Lodi, CA 95240
Ph: 916.691.2400 Fax: 916.691.2401

DATE	REVISION	BY

PROJECT ENGINEER
ERIC ESPINOZA

COUNTY OF SANTA CRUZ - DEPARTMENT OF PUBLIC WORKS

EUREKA CANYON - PM 3.16
STORM DAMAGE REPAIR PROJECT

DRAWN: K. MOE
CHECKED: R. GRIGGS
DATE: 2/20/25
SCALE: AS NOTED
JOB NO. P76519

The County or its officers or agents
shall not be responsible for the accuracy or
completeness of electronic copies of this plan sheet.

ROADWAY ITEMS - PM 3.16

ITEM	CLASS 2 AGGREGATE BASE	HOT MIX ASPHALT (TYPE A)	COLD PLANE ASPHALT CONCRETE PAVEMENT	ROADWAY EXCAVATION	MIDWEST GUARDRAIL SYSTEM (8' POST)	PLACE HMA DIKE (TYPE F)	6" THERMOPLASTIC TRAFFIC STRIPE	30" CORRUGATED STEEL PIPE DOWNDRAIN (.079" THICK)	30" ANCHOR ASSEMBLY	ROCK SLOPE PROTECTION (60 LB, CLASS II, METHOD B)	ROCK SLOPE PROTECTION FABRIC (CLASS 8)	DEBRIS REMOVAL/CLEAN DITCH	REMOVE CULVERT	REMOVE ASPHALT CONCRETE DIKE	REMOVE GUARDRAIL	FIBER ROLLS	HYDROSEED	TEMPORARY HYDROSEED	TEMPORARY HIGH-VISIBILITY FENCE	REMOVE TREE	DUFF
	CY	TON	SQYD	CY	LF	LF	LF	LF	EA	CY	SQYD	SQYD	LF	LF	LF	LF	SQFT	SQYD	LF	EA	SQFT
"EC 3.16"	7	34	114	9	50	44	190	6	1	6	21	51	37	44	50	348	4240	85	463	3	4370

TRAFFIC CONTROL ITEMS - PM 3.16

ITEM	TEMPORARY CRASH CUSHION	TEMPORARY RAILING (TYPE K)	PORTABLE DELINEATOR	PORTABLE SIGNAL SYSTEMS	PORTABLE CHANGEABLE MESSAGE SIGN	TEMPORARY PAVEMENT MARKING (PAINT)
	EA	LF	EA	EA	EA	SQFT
"EC 3.16"	2	100	18	1	1	21

NOTE:
The Contractor shall verify all
controlling field dimensions before
ordering or fabricating any material.

SUMMARY OF QUANTITIES

NO SCALE

Q-1

RELATIVE BORDER SCALE IS IN INCHES 0 1 2 3

#FILEABBREV

SHEET NAME:

DRAWING NAME:

DOKKEN ENGINEERING
110 Rue Louis Xiii, Suite 200
Lafayette, Louisiana 70508
Ph: 337.262.2161 Fax: 337.262.2164

DATE	REVISION	BY

PROJECT ENGINEER
ERIC ESPINOZA

COUNTY OF SANTA CRUZ - DEPARTMENT OF PUBLIC WORKS

EUREKA CANYON - PM 3.16
STORM DAMAGE REPAIR PROJECT

DRAWN: K. MOE
CHECKED: R. GRIGGS
DATE: 2/20/25
SCALE: AS NOTED
JOB NO. P76519

The County or its officers or agents shall not be responsible for the accuracy or completeness of electronic copies of this plan sheet.

RIPARIAN PLANTINGS

Scientific Name	Common Name	SIZE	Quantity	Spacing
Trees				
Acer macrophyllum	Bigleaf Maple	One Gallon	14	SEE PLAN
Sequoia sempervirens	Coast Redwood	One Gallon	8	SEE PLAN
Vasculars				
Carex angustata	Common Ladyfern	Container	28	4 FT
Adiantum pedatum l.	Five Finger Maidenhair	Container	28	4 FT
Polystichum munitum	Western Sword Fern	Container	28	4 FT

NOTES:

1. PLANTINGS WITHIN 10 FEET OF ROADWAY SHALL BE CAGED.

DOKKEN ENGINEERING
110 Blue Ridge Road, Suite 200
Santa Cruz, CA 95060
Ph: 831-457-0962 Fax: 831-457-0964

LEGEND:

- REDWOOD RIPARIAN HYDROSEED MIX
- RIPARIAN FERN PLANTINGS - SEE TABLE
- DUFF
- PACIFIC RUSH PLUGS (40 EA)
- BIGLEAF MAPLE (14 TOTAL)
- COAST REDWOOD (8 TOTAL)
- FIBER ROLL

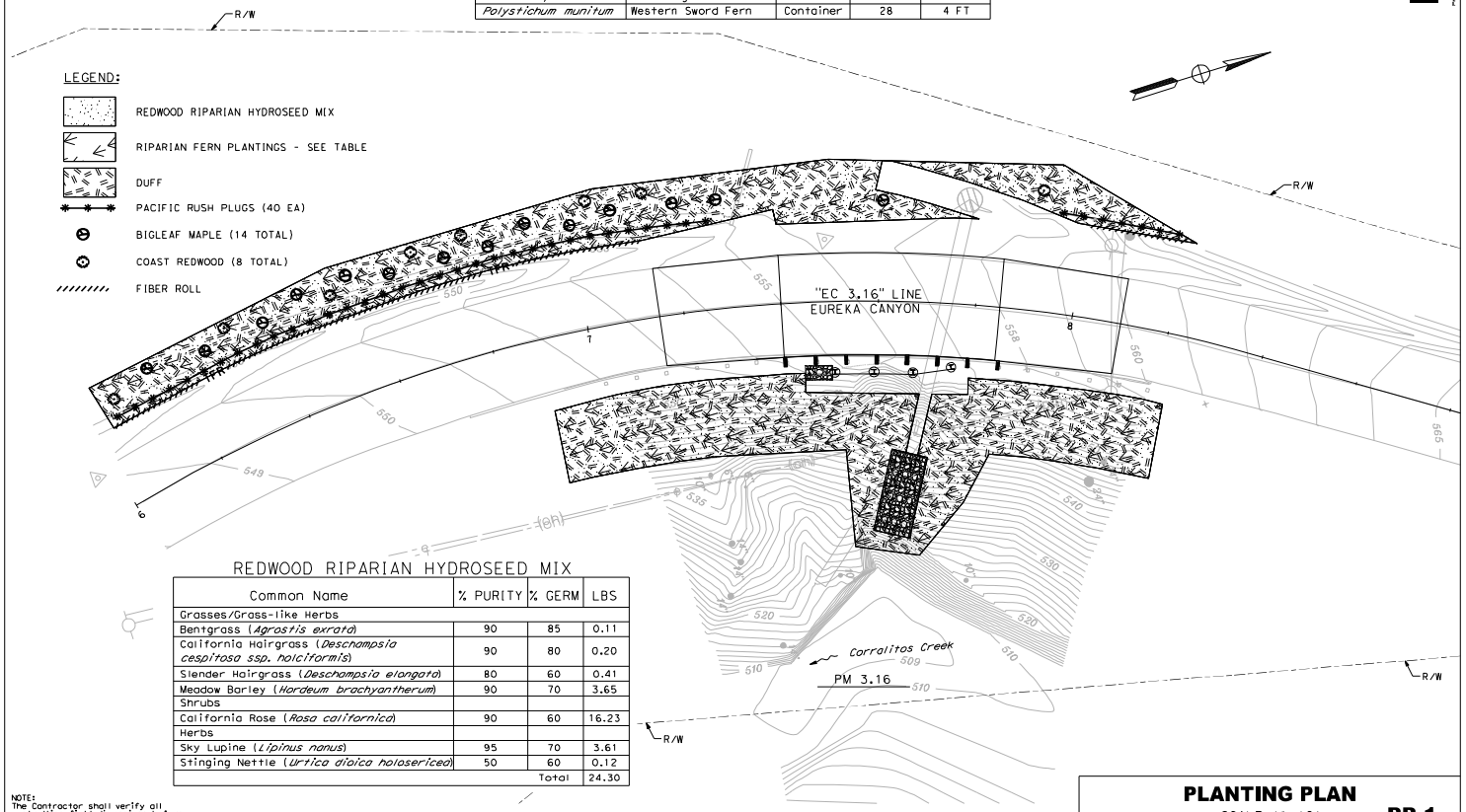

REDWOOD RIPARIAN HYDROSEED MIX

Common Name	% PURITY	% GERM	LBS
Grasses/Grass-like Herbs			
Bentgrass (*Agrostis exrata*)	90	85	0.11
California Hairgrass (*Deschampsia cespitosa ssp. holciformis*)	90	80	0.20
Slender Hairgrass (*Deschampsia elongata*)	80	60	0.41
Meadow Barley (*Hordeum brachyantherum*)	90	70	3.65
Shrubs			
California Rose (*Rosa californica*)	90	60	16.23
Herbs			
Sky Lupine (*Lipinus nanus*)	95	70	3.61
Stinging Nettle (*Urtica dioica holosericea*)	50	60	0.12
		Total	24.30

NOTE:
The Contractor shall verify all controlling field dimensions before ordering or fabricating any material.

PLANTING PLAN

SCALE 1"=10'

PP-1

RELATIVE BORDER SCALE IS IN INCHES 0 1 2 3

$FILEABBREV

SHEET NAME:

DRAWING NAME:

DATE	REVISION	BY

PROJECT ENGINEER
ERIC ESPINOZA

COUNTY OF SANTA CRUZ - DEPARTMENT OF PUBLIC WORKS

EUREKA CANYON - PM 3.16
STORM DAMAGE REPAIR PROJECT

DRAWN: K. MOE
CHECKED: R. GRIGGS
DATE: 2/20/25
SCALE: AS NOTED
JOB NO. P76519

The County or its officers or agents shall not be responsible for the accuracy or completeness of electronic copies of this plan sheet.

EROSION CONTROL

ITEM	MATERIAL		APPLICATION RATE
	DESCRIPTION	TYPE	
TEMPORARY HYDROSEED	SEED	SEED MIX	70 LB/ACRE
	FIBER	WOOD	2000 LB/ACRE
	NATURAL SLOW RELEASE FERTILIZER	GRANULAR	800 LB/ACRE
	TACKIFIER	PSYLLIUM	100 LB/ACRE

SEED MIX

BOTANICAL NAME	COMMON NAME	LB PURE LIVE SEED PER ACRE
BROMUS CARINATUS	CALIFORNIA BROME	25
ELYMUS GLAUCUS	BLUE WILDRYE	10
VULPIA MICROSTACHYS	THREE WEEKS FESCUE	6
TRIFOLIUM WILDENOVII	TOMCAT CLOVER	4
HORDEUM BRACHYANTHERUM	CALIFORNIA MEADOW BARLEY	25

DOKKEN ENGINEERING
110 Rue Louis XIII, Suite 200
Poway, CA 92064
Ph: 619.470.0400 Fax: 619.470.0405

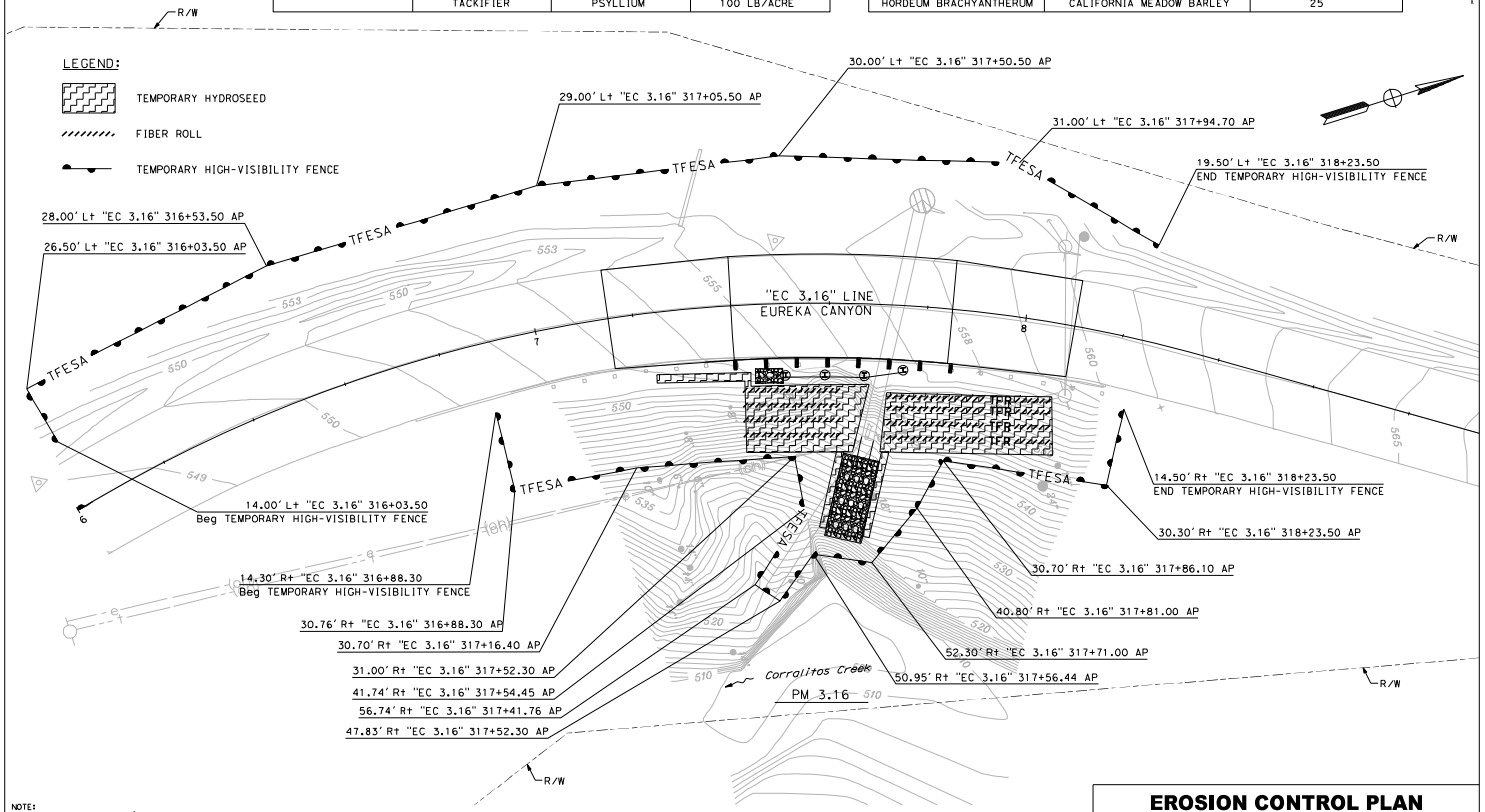

NOTE:
The Contractor shall verify all controlling field dimensions before ordering or fabricating any material.

EROSION CONTROL PLAN

SCALE 1" = 10'

EC-1

RELATIVE BORDER SCALE IS IN INCHES 0 1 2 3 | #FILEABBREV | SHEET NAME: | DRAWING NAME:

DATE	REVISION	BY

PROJECT ENGINEER: ERIC ESPINOZA

COUNTY OF SANTA CRUZ – DEPARTMENT OF PUBLIC WORKS

EUREKA CANYON – PM 3.16
STORM DAMAGE REPAIR PROJECT

DRAWN: K. MOE
CHECKED: R. GRIGGS
DATE: 2/20/25
SCALE: AS NOTED
JOB NO. P76519

The County or its officers or agents
shall not be responsible for the accuracy or
completeness of electronic copies of this plan sheet.

LEGEND:

REMOVE TREE (SEE SHEET L-1)

TREE TO REMAIN IN PLACE (SEE SHEET L-1)

Standard Plan sheet number

Detail number

CURVE DATA

CURVE	RADIUS	DELTA	TANGENT	LENGTH
1	290.00'	46°59'00.59"	126.05'	237.81'
2	275.00'	5°00'01"	12.01'	24.00'

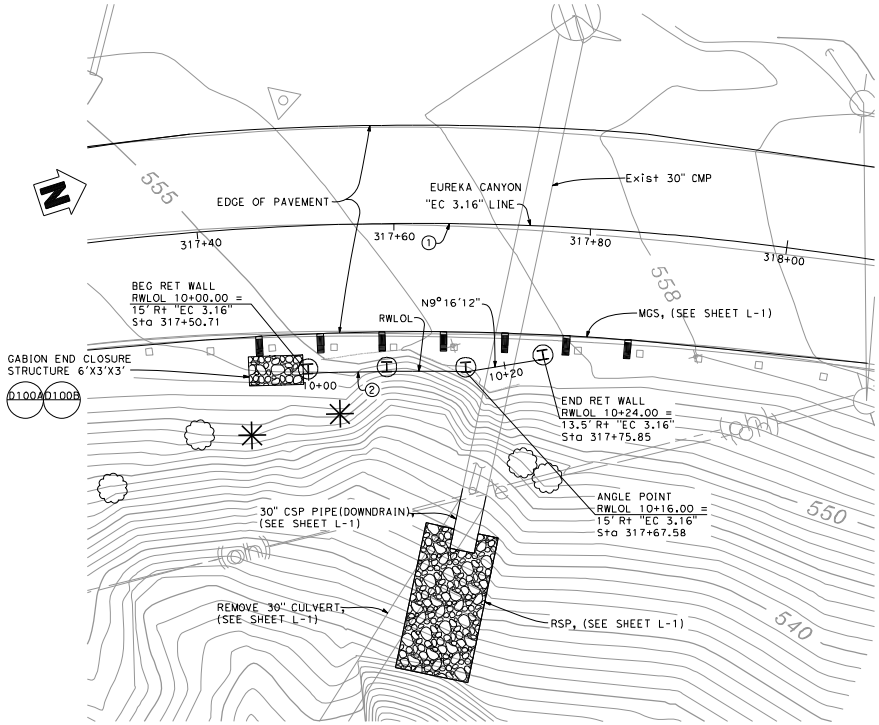

NOTE:
The Contractor shall verify all controlling field dimensions before ordering or fabricating any material.

PLAN

1" = 5'

GENERAL NOTES

DESIGN: AASHTO LRFD Bridge Design Specifications, 8th edition with California Amendments, Preface dated November 2019

Standard Plans and Specifications, 2024 edition with Revised Standard Plans, dated Oct 2024.

LIVE LOAD: 240 psf equivalent to 2 feet soil weight

SEISMIC PARAMETERS: Seismic Increment: 10H psf uniform pressure, H is the wall height in feet.

SOIL PARAMETERS: (For determination of Design Lateral Earth Pressures)
Backfill soil weight = 120 lb/ft^3
Friction Angle = 34°
Active Pressure coefficent, Ka = 0.28

STEEL SOLDIER PILES: ASTM A572/A, ASTM 572M Grade 50 Min

CONCRETE: f'c = 4000 psi

STRUCTURAL TIMBER: Treated Douglas Fir, Grade No. 1 or better. Timber to be full sawn.
Fbo = 1.20 KSI

WALER, TIE & BEARING PLATES: Fy = 36 KSI

PRESTRESSING STEEL (TIEBACK ANCHOR):
FDL= Factored Design Load on tieback anchor (kips)
FTL=Factored Test Load (kips)
LL=Lock-Off Load (kips)
fpu = Minimum ultimate tensile strength of tieback anchor steel (ksi)
As (Min) = Minimum cross sectional area of steel in tieback anchor. (square inch)
Steel = ASTM designation: A416 (HS Strands)

$$As\ (Min) = \frac{1.0\ FTL}{0.75\ fpu}$$

FDL= 60 Kips

FTL= 60 Kips 1.0 FDL } Per MTD 5-12

LL= 40 Kips 0.67 FDL } Per MTD 5-12

QUANTITIES

Item	Total
STRUCTURE EXCAVATION (SOLDIER PILE WALL)	28 CY
STRUCTURE BACKFILL (SOLDIER PILE WALL)	22 CY
CONCRETE BACKFILL (SOLDIER PILE WALL)	9 CY
LEAN CONCRETE BACKFILL	6 CY
TIEBACK ANCHOR ASSEMBLY (COMPLETE-IN-PLACE)	2 EA
STEEL SOLDIER PILE (HP12X84)	133 LF
24" DRILLED HOLE	128 LF
STEEL WALERS (COMPLETE-IN-PLACE)	2 EA
TIMBER LAGGING	232 SQFT
CLEAN AND PAINT STEEL SOLDIER PILING & WALERS	1 LS
GABION	2 CY

DOKKEN ENGINEERING
110 BLUE RIDGE ROAD, SUITE 200
MORGAN HILL, CA 95037
PH: 510-450-6041 FAX: 510-450-6043

GENERAL PLAN

S-1

RELATIVE BORDER SCALE IS IN INCHES 0 1 2 3

$FILEABBREV

SHEET NAME:

DRAWING NAME:

DATE	REVISION	BY

REGISTERED PROFESSIONAL ENGINEER
DOUGLAS LINN
No. 84562
Exp. 12-31-27
CIVIL
STATE OF CALIFORNIA

PROJECT ENGINEER
ROSA GRIGGS

COUNTY OF SANTA CRUZ – DEPARTMENT OF PUBLIC WORKS

EUREKA CANYON ROAD – PM 3.16
STORM DAMAGE REPAIR PROJECT

DRAWN: D. YANG
CHECKED: N. ORTIGOZA
DATE: 2/20/2025
SCALE: AS NOTED
JOB NO. P76519
SHEET

The County or its officers or agents
shall not be responsible for the accuracy or
completeness of electronic copies of this plan sheet.

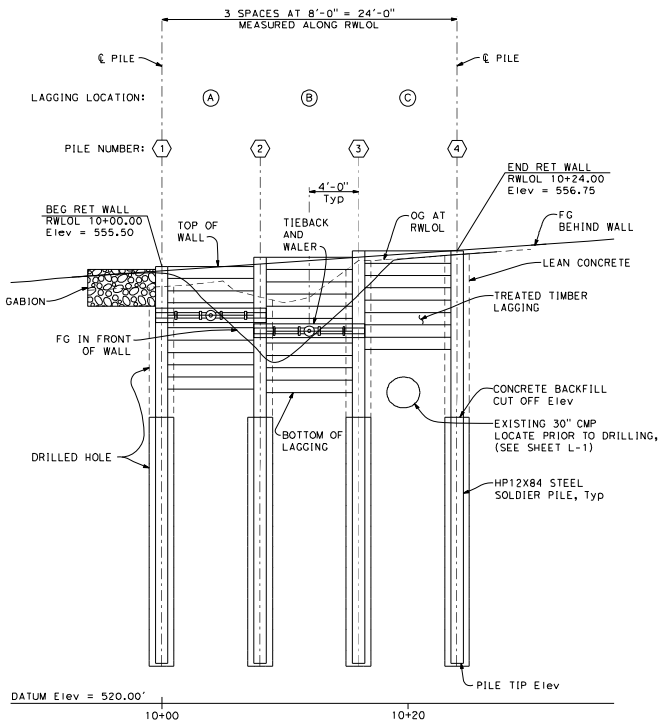

DEVELOPED ELEVATION

1/4" = 1'-0"

NOTE:
The Contractor shall verify all
controlling field dimensions before
ordering or fabricating any material.

TIEBACK AND LAGGING TABLE

LOCATION	TIEBACK STATION ALONG RWLOL	TIEBACK ELEVATION AT RWLOL	TOP OF LAGGING ELEVATION	BOTTOM OF LAGGING ELEVATION
A	10+04.00	551.50	555.50	545.50
B	10+12.00	550.25	556.25	545.25
C	10+20.00	N/A	556.75	548.75

SOLDIER PILE DATA

PILE NUMBER	STATION ALONG RWLOL	PILE TIP ELEVATION	CONC BACKFILL CUT OFF ELEVATION	TOP OF PILE ELEVATION
1	10+00.00	523.25	543.25	555.50
2	10+08.00	523.25	543.25	556.25
3	10+16.00	523.25	543.25	556.75
4	10+24.00	523.25	543.25	556.75

DOKKEN ENGINEERING
113 BLUE RIDGE ROAD, SUITE 200
MORGAN HILL, CA 95037
PH: 510-420-0412 FAX: 510-420-0445

SOLDIER PILE ELEVATION
S-2

RELATIVE BORDER SCALE IS IN INCHES 0 1 2 3

$FILEABBREV

SHEET NAME:

DRAWING NAME:

DATE	REVISION	BY

PROFESSIONAL ENGINEER
ROBIN M. LIM
No. 75502
Exp. 3-31-27
CIVIL
STATE OF CALIFORNIA

PROJECT ENGINEER
ROSA GRIGGS

COUNTY OF SANTA CRUZ – DEPARTMENT OF PUBLIC WORKS

EUREKA CANYON ROAD – PM 3.16
STORM DAMAGE REPAIR PROJECT

DRAWN: D. YANG
CHECKED: N. ORTIGOZA
DATE: 2/20/2025
SCALE: AS NOTED
JOB NO. P76519

The County or its officers or agents
shall not be responsible for the accuracy or
completeness of electronic copies of this plan sheet.

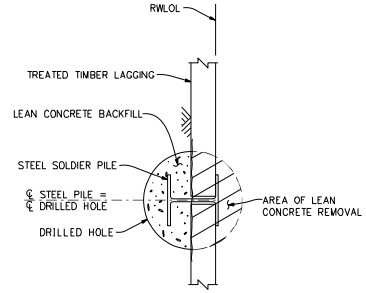

PILE SECTION B-B

NO SCALE

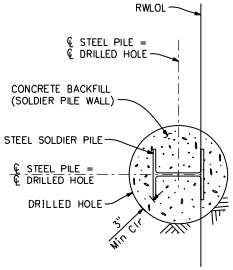

PILE SECTION C-C

NO SCALE

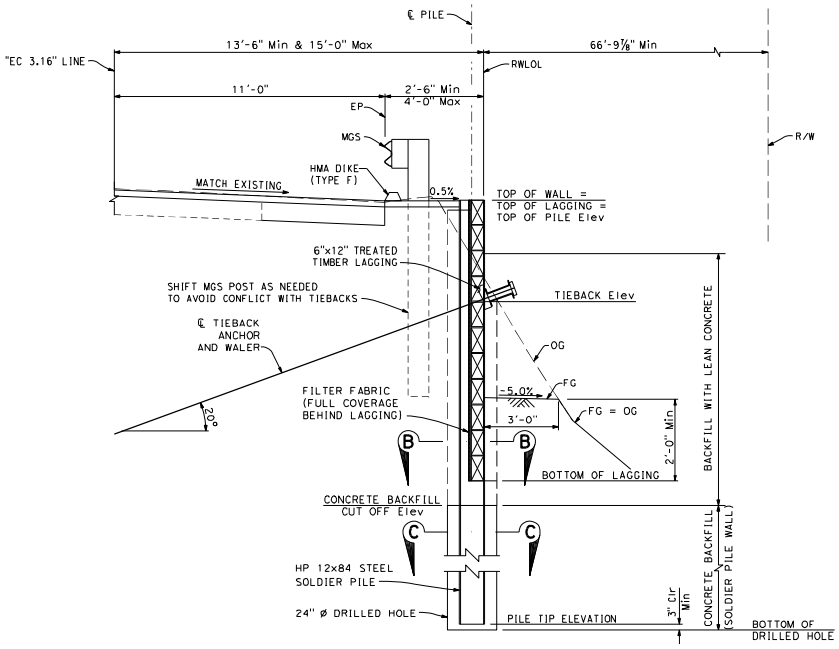

TYPICAL SECTION

½" = 1'-0"

NOTES:

1. For lagging details, see "RETAINING WALL DETAILS" sheet S-4.
2. For tieback and waler details, see "TIEBACK DETAILS" sheet S-5.
3. Clean and paint steel soldier pile from top of pile to 5 feet min below bottom of lagging.

NOTE:
The Contractor shall verify all controlling field dimensions before ordering or fabricating any material.

DOKKEN ENGINEERING
113 Blue Ravine Road, Suite 200
Folsom, California 95630
Ph: 916-608-9040 Fax: 916-608-9043

TYPICAL SECTION

S-3

RELATIVE BORDER SCALE IS IN INCHES 0 1 2 3 | $FILEABBREV | SHEET NAME: | DRAWING NAME:

DATE	REVISION	BY

PROFESSIONAL ENGINEER — ROBIN M. LIM — No. 76562 — Exp. 12-31-27 — CALIFORNIA

PROJECT ENGINEER: ROSA GRIGGS

COUNTY OF SANTA CRUZ – DEPARTMENT OF PUBLIC WORKS

EUREKA CANYON ROAD – PM 3.16
STORM DAMAGE REPAIR PROJECT

DRAWN: D. YANG
CHECKED: N. ORTIGOZA
DATE: 2/20/2025
SCALE: AS NOTED
JOB NO. P76519
SHEET 11 OF 51

The County or its officers or agents
shall not be responsible for the accuracy or
completeness of electronic copies of this plan sheet.

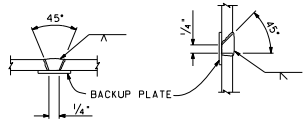

SINGLE VEE-GROOVE **SINGLE BEVEL-GROOVE**

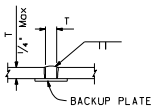

SQUARE GROOVE

NOTES:

1. Single vee-groove and square groove permitted for all positions.
2. Single bevel-groove permitted for horizontal joints only.

PILE WELDING DETAIL - BUTT JOINTS

NO SCALE

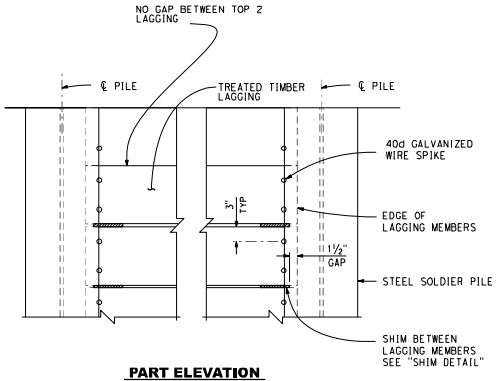

PART ELEVATION

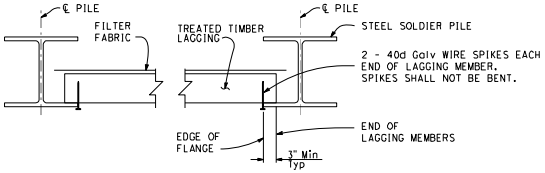

PART PLAN

LAGGING DETAILS

no scale

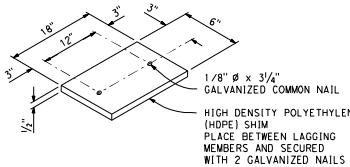

SHIM DETAIL

NO SCALE

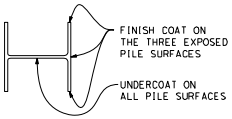

LIMITS OF CLEAN AND PAINT STEEL SOLDIER PILE

NO SCALE

NOTES:

1. Clean and paint all exposed surfaces of waters.
2. No clipping of timber lagging corners allowed.

NOTE:
The Contractor shall verify all controlling field dimensions before ordering or fabricating any material.

RETAINING WALL DETAILS

S-4

RELATIVE BORDER SCALE IS IN INCHES 0 1 2 3

$FILEABBREV

SHEET NAME:

DRAWING NAME:

DOKKEN ENGINEERING
113 BLUE RUNN ROAD, SUITE 200
SACRAMENTO, CALIFORNIA 95819
PH: 916.362.2040 FAX: 916.362.2043

DATE	REVISION	BY

PROFESSIONAL ENGINEER — ROSIM LIM — No. 76519 — Exp. 12-31-27 — CIVIL — STATE OF CALIFORNIA

PROJECT ENGINEER: ROSA GRIGGS

COUNTY OF SANTA CRUZ – DEPARTMENT OF PUBLIC WORKS

EUREKA CANYON ROAD – PM 3.16
STORM DAMAGE REPAIR PROJECT

DRAWN: D. YANG
CHECKED: N. ORTIGOZA
DATE: 2/20/2025
SCALE: AS NOTED
JOB NO. P76519

The County or its officers or agents shall not be responsible for the accuracy or completeness of electronic copies of this plan sheet.

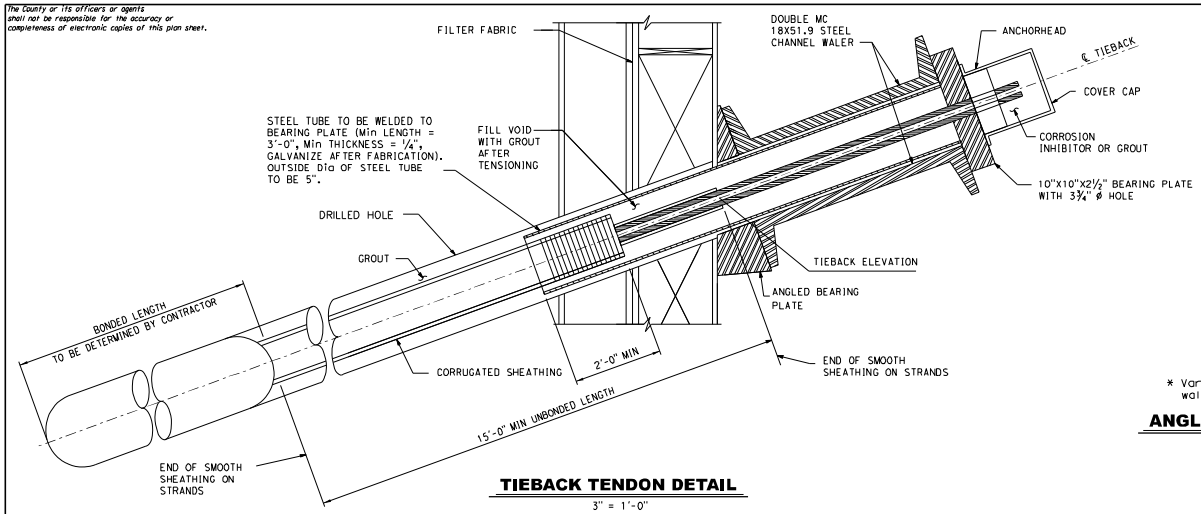

TIEBACK TENDON DETAIL

3" = 1'-0"

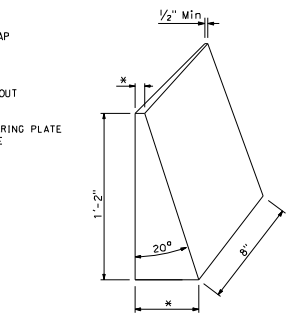

* Vary thickness as needed to ensure waler lays flat in curved portions

ANGLED BEARING PLATE DETAIL
ISOMETRIC VIEW

no scale

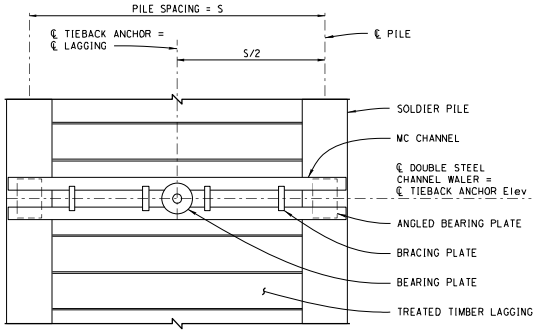

DOUBLE STEEL CHANNEL WALER ELEVATION

¾" = 1'-0"

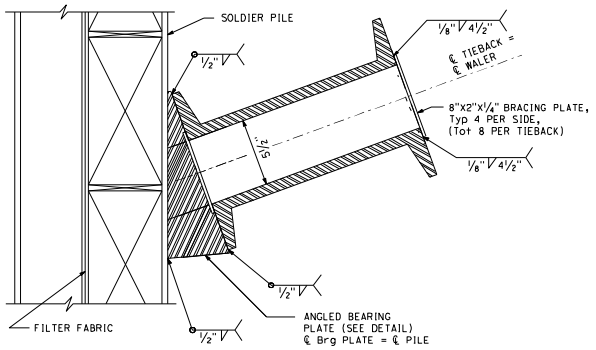

DOUBLE STEEL CHANNEL WALER SECTION

3" = 1'-0"

NOTE:
1. Clean and paint all exposed surfaces of walers.

NOTE:
The Contractor shall verify all controlling field dimensions before ordering or fabricating any material.

TIEBACK DETAILS

S-5

RELATIVE BORDER SCALE IS IN INCHES 0 1 2 3 | $FILEABBREV | SHEET NAME: | DRAWING NAME:

DOKKEN ENGINEERING
113 Blue Ravine Road, Suite 200
Folsom, California 95630
Ph: 916.608.9040 Fax: 916.608.9043

REVISION	DATE	BY

REGISTERED PROFESSIONAL ENGINEER
ROBIN LAM
No. 84562
Exp. 12-31-27
CIVIL
STATE OF CALIFORNIA

PROJECT ENGINEER
ROSA GRIGGS

COUNTY OF SANTA CRUZ – DEPARTMENT OF PUBLIC WORKS

EUREKA CANYON ROAD – PM 3.16
STORM DAMAGE REPAIR PROJECT

DRAWN: D. YANG
CHECKED: N. ORTIGOZA
DATE: 2/20/2025
SCALE: AS NOTED
JOB NO. P76519
SHEET 13 OF 51

The County or its officers or agents
shall not be responsible for the accuracy or
completeness of electronic copies of this plan sheet.

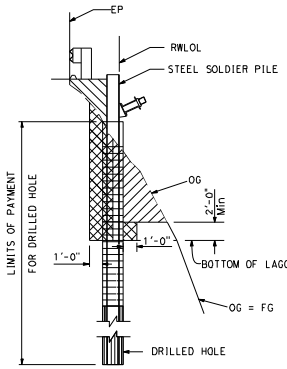

AT STEEL PILES

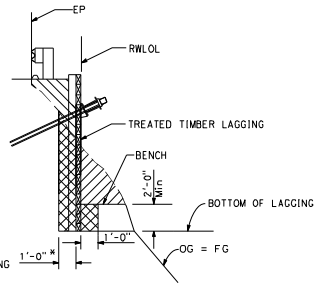

AT TIMBER LAGGING

LEGEND:

- STRUCTURE EXCAVATION (SOLDIER PILE WALL) **
- STRUCTURE BACKFILL (SOLDIER PILE WALL)
- LEAN CONCRETE BACKFILL
- CONCRETE BACKFILL (SOLDIER PILE WALL)

* FOR ESTIMATING PURPOSES ONLY, CARE SHALL BE TAKEN DURING EXCAVATION SUCH THAT A MINIMUM VOID IS EXCAVATED.

** INCLUDES REMOVAL OF LEAN CONCRETE AS SHOWN ON "SECTION B-B" OF "TYPICAL SECTION" SHEET S-3.

LIMITS OF PAYMENT FOR EXCAVATION AND BACKFILL

NO SCALE

CONSTRUCTION SEQUENCE

1. DRILL HOLES.
2. INSTALL SOLDIER PILES.
3. PLACE CONCRETE BACKFILL AND LEAN CONCRETE PER TYPICAL SECTION.
4. EXCAVATE (5' MAX LIFTS) AS NEEDED, THEN INSTALL LAGGING. DO NOT EXCAVATE MORE THAN 3 FEET BELOW ANY LEVEL OF TIEBACKS THAT HAVE NOT BEEN STRESSED AND GROUTED.
5. INSTALL TIMBER LAGGING AND BACKFILL CONCURRENTLY BEHIND WALL FROM OG TO FG.
6. INSTALL TIEBACKS & WALERS.
7. TENSION TIEBACK ASSEMBLIES.
8. CONTINUE EXCAVATION AND TIMBER LAGGING INSTALLATION TO BOTTOM OF LAGGING ELEVATION.

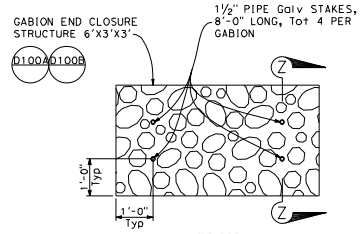

PLAN

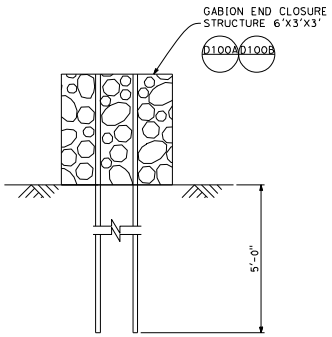

SECTION Z-Z

GABION STAKING DETAILS

NO SCALE

NOTE:
The Contractor shall verify all controlling field dimensions before ordering or fabricating any material.

MISCELLANEOUS DETAILS

S-6

RELATIVE BORDER SCALE IS IN INCHES 0 1 2 3 | $FILEABBREV | SHEET NAME: | DRAWING NAME:

DOKKEN ENGINEERING
110 BLUE ALVARA ROAD, SUITE 200
SANTA CRUZ, CALIFORNIA 95060
PH: 831-425-0944 FAX: 831-425-0943

DATE	REVISION	BY

PROJECT ENGINEER: ROSA GRIGGS

COUNTY OF SANTA CRUZ – DEPARTMENT OF PUBLIC WORKS

EUREKA CANYON ROAD – PM 3.16
STORM DAMAGE REPAIR PROJECT

DRAWN: D. YANG
CHECKED: N. ORTIGOZA
DATE: 2/20/2025
SCALE: AS NOTED
JOB NO. P76519

The County or its officers or agents shall not be responsible for the accuracy or completeness of electronic copies of this plan sheet.

LEGEND:

- CURVE NUMBER
- TRAFFIC STRIPE DETAIL
- NEW STRUCTURAL SECTION
- LONGITUDINAL CONFORM
- DEBRIS REMOVAL/CLEAN DITCH
- Exist ELECTRIC OVERHEAD (PG&E)
- Exist TELECOM OVERHEAD (AT&T)
- REMOVE TREE
- TREE TO REMAIN IN PLACE

PROJECT CONTROL							
No	NORTHING	EASTING	ELEV	LINE	STATION	OFFSET	DESCRIPTION
321	1836862.34	6176370.44	570.37	"H3.36"	-	-	60D
322	1836641.18	6176467.23	570.82	"H3.36"	339+13.27	13.05' R+	60D
323	1836424.36	6176455.33	573.26	"H3.36"	336+97.03	10.90' R+	CNAIL
324	1836261.39	6176167.97	571.40	"H3.36"	-	-	60D

DATUM NOTE
HORIZONTAL DATUM: NAD 83 CALIFORNIA ZONE 3
VERTICAL DATUM: NAVD 88

CURVE DATA

No. (X)	R	Δ	T	L
1	130.00	63°51'44	81.02	144.90
2	630.00	4°26'59"	24.48	48.93

NOTES:

1. PROVIDE SECONDARY CONTAINMENT IN COMBINATION WITH PRIMARY CONTAINMENT IF STAGING AREAS ARE WITHIN 100 FEET FROM A WATERBODY. SECONDARY CONTAINMENT MAY BE IN THE FORM OF A SOIL BERM, PLASTIC COVERED GRAVEL BAGS, OR SIMILAR IMPERVIOUS FEATURE THAT PREVENTS LIQUIDS FROM FLOWING OFF OF THE STAGING AREA.
2. FOR EXISTING GUARDRAIL TIE IN DETAILS, SEE CALTRANS STANDARD PLANS.

DOKKEN ENGINEERING
110 Blue Ridge Street, Suite 200
Santa Cruz, CA 95060
Ph: 831.457.0962 Fax: 831.457.0964

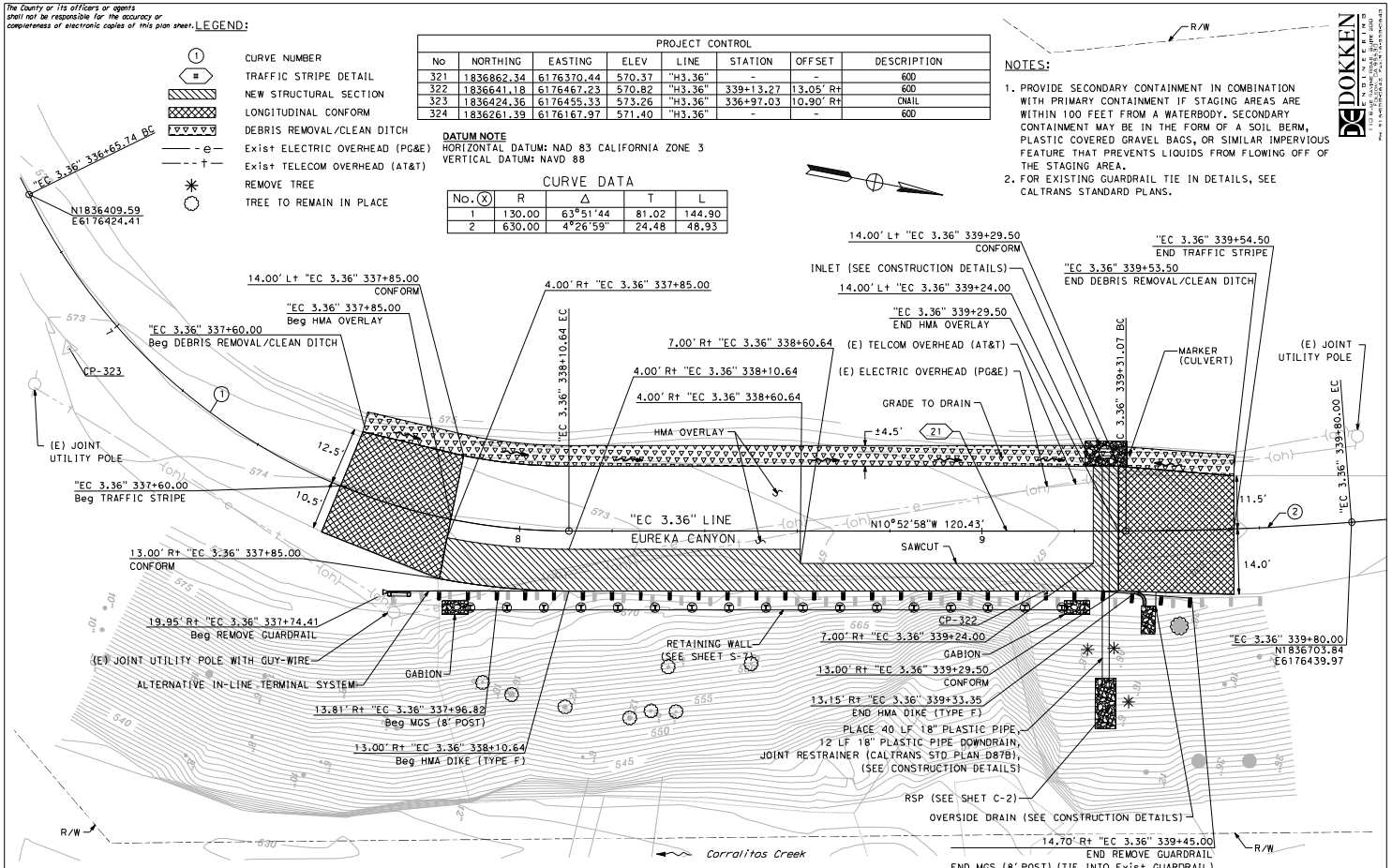

NOTE:
The Contractor shall verify all controlling field dimensions before ordering or fabricating any material.

PM 3.36

LAYOUT
SCALE 1" = 10'

L-2

RELATIVE BORDER SCALE IS IN INCHES 0 1 2 3 | #FILEABBREV | SHEET NAME: | DRAWING NAME:

DATE	REVISION	BY

PROJECT ENGINEER
ERIC ESPINOZA

COUNTY OF SANTA CRUZ - DEPARTMENT OF PUBLIC WORKS
EUREKA CANYON - PM 3.36
STORM DAMAGE REPAIR PROJECT

DRAWN: K. MOE
CHECKED: R. GRIGGS
DATE: 2/20/25
SCALE: AS NOTED
JOB NO. P76520
SHEET 15 OF 51

The County or its officers or agents shall not be responsible for the accuracy or completeness of electronic copies of this plan sheet.

LEGEND:

- COLD PLANE ASPHALT CONCRETE PAVEMENT
- ROCK SLOPE PROTECTION
- DEBRIS REMOVAL/CLEAN DITCH

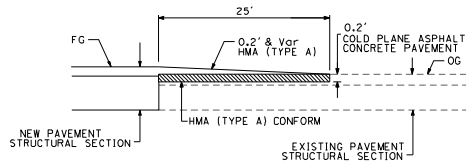

LONGITUDINAL CONFORM DETAIL

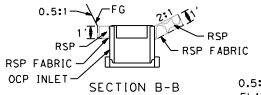

SECTION B-B

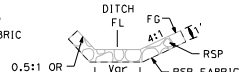

SECTION C-C

SECTION D-D

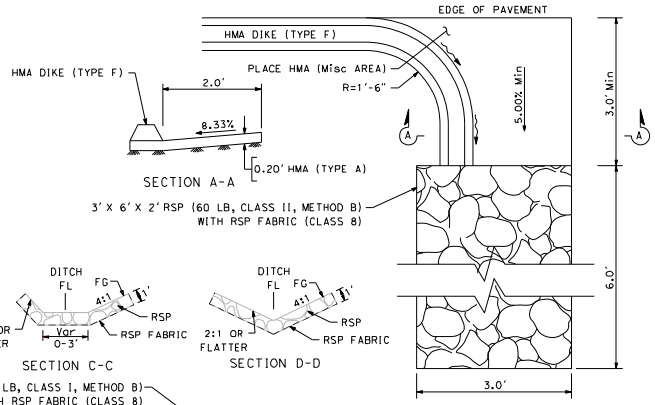

OVERSIDE DRAIN DETAIL

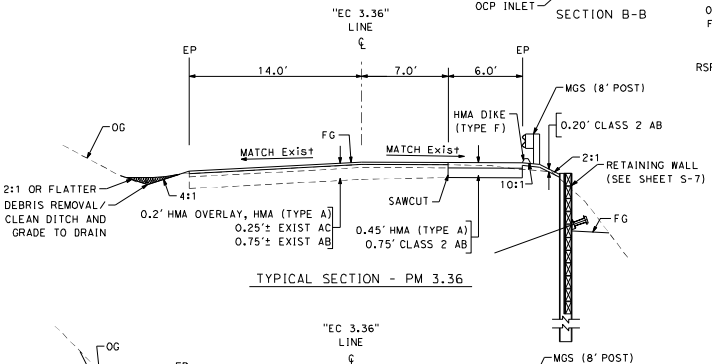

TYPICAL SECTION - PM 3.36

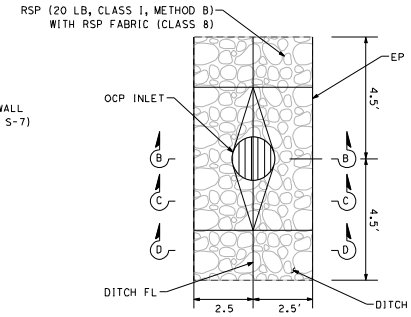

PLAN

INLET DETAIL

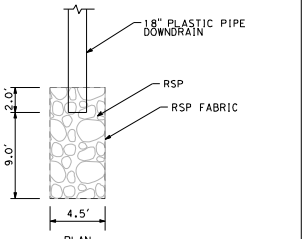

PLAN

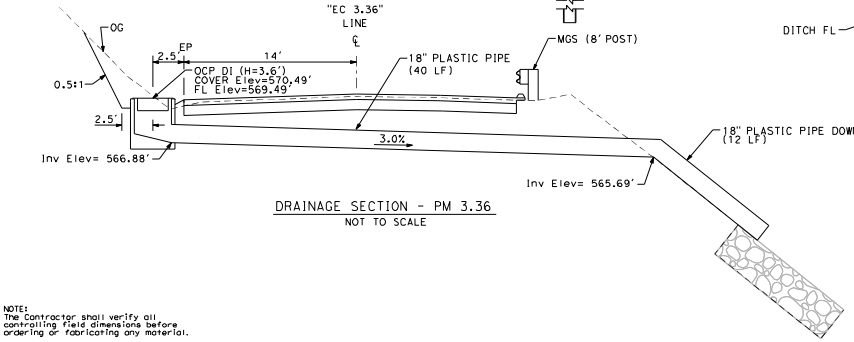

DRAINAGE SECTION - PM 3.36

NOT TO SCALE

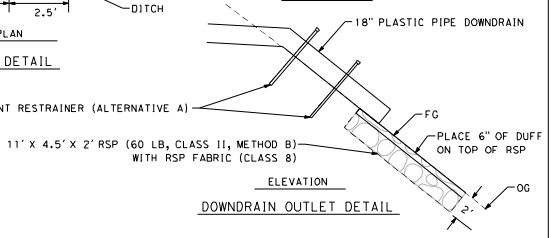

ELEVATION

DOWNDRAIN OUTLET DETAIL

NOTE:
The Contractor shall verify all controlling field dimensions before ordering or fabricating any material.

CONSTRUCTION DETAILS

NO SCALE

C-2

RELATIVE BORDER SCALE IS IN INCHES 0 1 2 3

#FILEABBREV

SHEET NAME:

DRAWING NAME:

DOKKEN ENGINEERING
110 Blue Ridge Drive, Suite 200
Santa Cruz, CA 95060
Ph: 831.426.9560 Fax: 831.426.9561

DATE	REVISION	BY

PROJECT ENGINEER: ERIC ESPINOZA

COUNTY OF SANTA CRUZ - DEPARTMENT OF PUBLIC WORKS

EUREKA CANYON - PM 3.36
STORM DAMAGE REPAIR PROJECT

DRAWN: K. MOE
CHECKED: R. GRIGGS
DATE: 2/20/25
SCALE: AS NOTED
JOB NO. P76520

The County or its officers or agents shall not be responsible for the accuracy or completeness of electronic copies of this plan sheet.

LEGEND:

- PORTABLE SIGNAL SYSTEM
- DIRECTION OF TRAFFIC
- TWO WAY TRAFFIC (ONE LANE)
- CONSTRUCTION AREA SIGN

CONSTRUCTION AREA SIGNS QUANTITY TABLE

SIGN	SIGN CODE	PANEL SIZE	MESSAGE	No. AND SIZE OF POSTS	(N) No. OF SIGNS
A	W20-1	36" X 36"	ROAD WORK AHEAD	1 - 4" x 6"	2
B	W20-4	36" X 36"	ONE LANE ROAD AHEAD	1 - 4" x 6"	2
C	W3-3	36" X 36"	SIGNAL AHEAD	1 - 4" x 6"	2
	W13-1P	24" X 24"	20 MPH		2
D	W3-4	36" X 36"	BE PREPARED TO STOP	1 - 4" x 6"	2
E	R10-6	24" X 30"	STOP HERE ON RED	1 - 4" x 6"	2
F	G20-2	36" X 18"	END ROAD WORK	1 - 4" x 6"	2

NOTES:

1. CONSTRUCT UNDER TRAFFIC CONTROL PRIOR TO INSTALLING THE K-RAIL

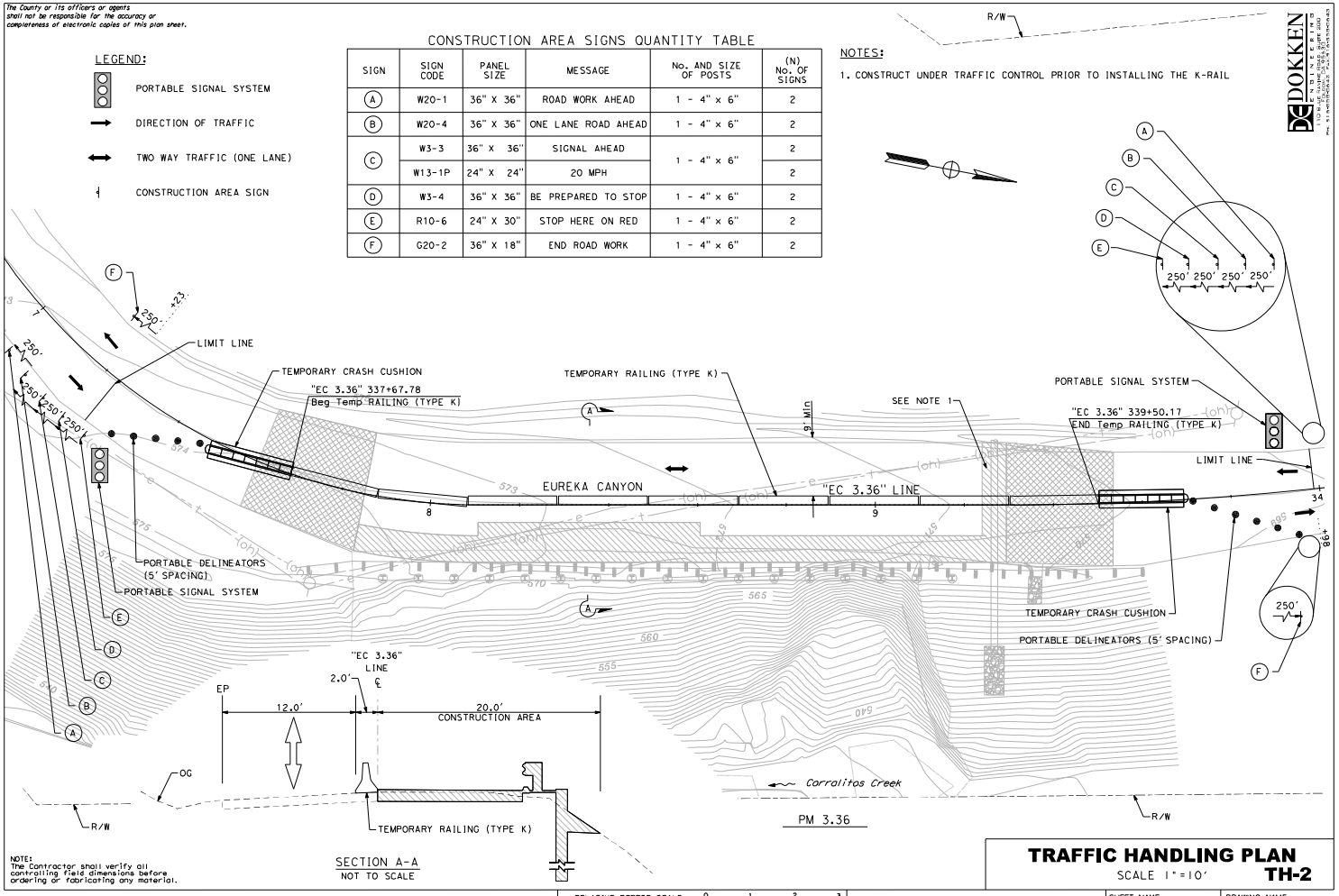

SECTION A-A
NOT TO SCALE

NOTE:
The Contractor shall verify all controlling field dimensions before ordering or fabricating any material.

TRAFFIC HANDLING PLAN

SCALE 1"=10'

TH-2

RELATIVE BORDER SCALE IS IN INCHES 0 1 2 3

#FILEABBREV

SHEET NAME:

DRAWING NAME:

DOKKEN ENGINEERING
110 Rue Lione Street, Suite 200
Lafayette, LA 70508
Ph: 337.262.2942 Fax: 337.262.2943

DATE	REVISION	BY

PROJECT ENGINEER
ERIC ESPINOZA

COUNTY OF SANTA CRUZ - DEPARTMENT OF PUBLIC WORKS

EUREKA CANYON - PM 3.36
STORM DAMAGE REPAIR PROJECT

DRAWN: K. MOE
CHECKED: R. GRIGGS
DATE: 2/20/25
SCALE: AS NOTED
JOB NO. P76520

The County or its officers or agents
shall not be responsible for the accuracy or
completeness of electronic copies of this plan sheet.

ROADWAY ITEMS - PM 3.36

ITEM	CLASS 2 AGGREGATE BASE	HOT MIX ASPHALT (TYPE A)	COLD PLANE ASPHALT CONCRETE PAVEMENT	ROADWAY EXCAVATION	MIDWEST GUARDRAIL SYSTEM (8' POST)	ALTERNATIVE IN-LINE TERMINAL SYSTEM	PLACE HMA DIKE (TYPE F)	PLACE HOT MIX ASPHALT (MISCELLANEOUS AREA)	6" THERMOPLASTIC TRAFFIC STRIPE	MISCELLANEOUS IRON AND STEEL	36" PRECAST CONCRETE PIPE INLET	18" PLASTIC PIPE	18" PLASTIC PIPE DOWNDRAIN	ROCK SLOPE PROTECTION (20 LB, CLASS I, METHOD B)	ROCK SLOPE PROTECTION (60 LB, CLASS II, METHOD B)	ROCK SLOPE PROTECTION FABRIC (CLASS 8)	DEBRIS REMOVAL/CLEAN DITCH	REMOVE GUARDRAIL	MARKER (CULVERT)	HYDROSEED	FIBER ROLLS	TEMPORARY HYDROSEED	TEMPORARY HIGH-VISIBILITY FENCE	REMOVE TREE	DUFF
	CY	TON	SQYD	CY	LF	EA	LF	SQYD	LF	LF	LF	LF	LF	CY	CY	SQYD	SQYD	LF	EA	SQFT	LF	SQYD	LF	EA	SQFT
"EC 3.36"	37	102	143	46	150	1	128	1	389	112	4.1	40	12	2	4	25	94	176	1	5789	154	95	327	3	5812

TRAFFIC CONTROL ITEMS - PM 3.36

ITEM	TEMPORARY CRASH CUSHION	TEMPORARY RAILING (TYPE K)	PORTABLE DELINEATOR	PORTABLE SIGNAL SYSTEMS	TEMPORARY PAVEMENT MARKING (PAINT)
	EA	LF	EA	EA	SQFT
"EC 3.36"	2	180	11	1	20

NOTE:
The Contractor shall verify all
controlling field dimensions before
ordering or fabricating any material.

SUMMARY OF QUANTITIES

NO SCALE

Q-2

RELATIVE BORDER SCALE IS IN INCHES 0 1 2 3

#FILEABBREV

SHEET NAME:

DRAWING NAME:

DOKKEN ENGINEERING
110 Rue Lucine, Suite 200
Santa Cruz, CA 95060
Ph: 831-457-0962 Fax: 831-457-0963

DATE	REVISION	BY

PROJECT ENGINEER
ERIC ESPINOZA

COUNTY OF SANTA CRUZ - DEPARTMENT OF PUBLIC WORKS

EUREKA CANYON - PM 3.36
STORM DAMAGE REPAIR PROJECT

DRAWN: K. MOE
CHECKED: R. GRIGGS
DATE: 2/20/25
SCALE: AS NOTED
JOB NO. P76520

The County or its officers or agents shall not be responsible for the accuracy or completeness of electronic copies of this plan sheet.

RIPARIAN PLANTINGS

Scientific Name	Common Name	SIZE	Quantity	Spacing
Trees				
Acer macrophyllum	Bigleaf Maple	One Gallon	4	SEE PLAN
Sequoia sempervirens	Coast Redwood	One Gallon	1	SEE PLAN
Vasculars				
Carex angustata	Common Ladyfern	Container	36	4 FT
Adiantum pedatum l.	Five Finger Maidenhair	Container	36	4 FT
Polystichum munitum	Western Sword Fern	Container	36	4 FT

LEGEND:

- REDWOOD RIPARIAN HYDROSEED MIX
- RIPARIAN FERN PLANTINGS - SEE TABLE
- DUFF
- BIGLEAF MAPLE (4 TOTAL)
- COAST REDWOOD (1 TOTAL)

NOTES:

1. PLANTINGS WITHIN 10 FEET OF ROADWAY SHALL BE CAGED.

REDWOOD RIPARIAN HYDROSEED MIX

Common Name	% PURITY	% GERM	LBS
Grasses/Grass-like Herbs			
Bentgrass (*Agrostis exrata*)	90	85	0.11
California Hairgrass (*Deschampsia cespitosa ssp. holciformis*)	90	80	0.20
Slender Hairgrass (*Deschampsia elongata*)	80	60	0.41
Meadow Barley (*Hordeum brachyantherum*)	90	70	3.65
Shrubs			
California Rose (*Rosa californica*)	90	60	16.23
Herbs			
Sky Lupine (*Lipinus nanus*)	95	70	3.61
Stinging Nettle (*Urtica dioica holosericea*)	50	60	0.12
		Total	24.30

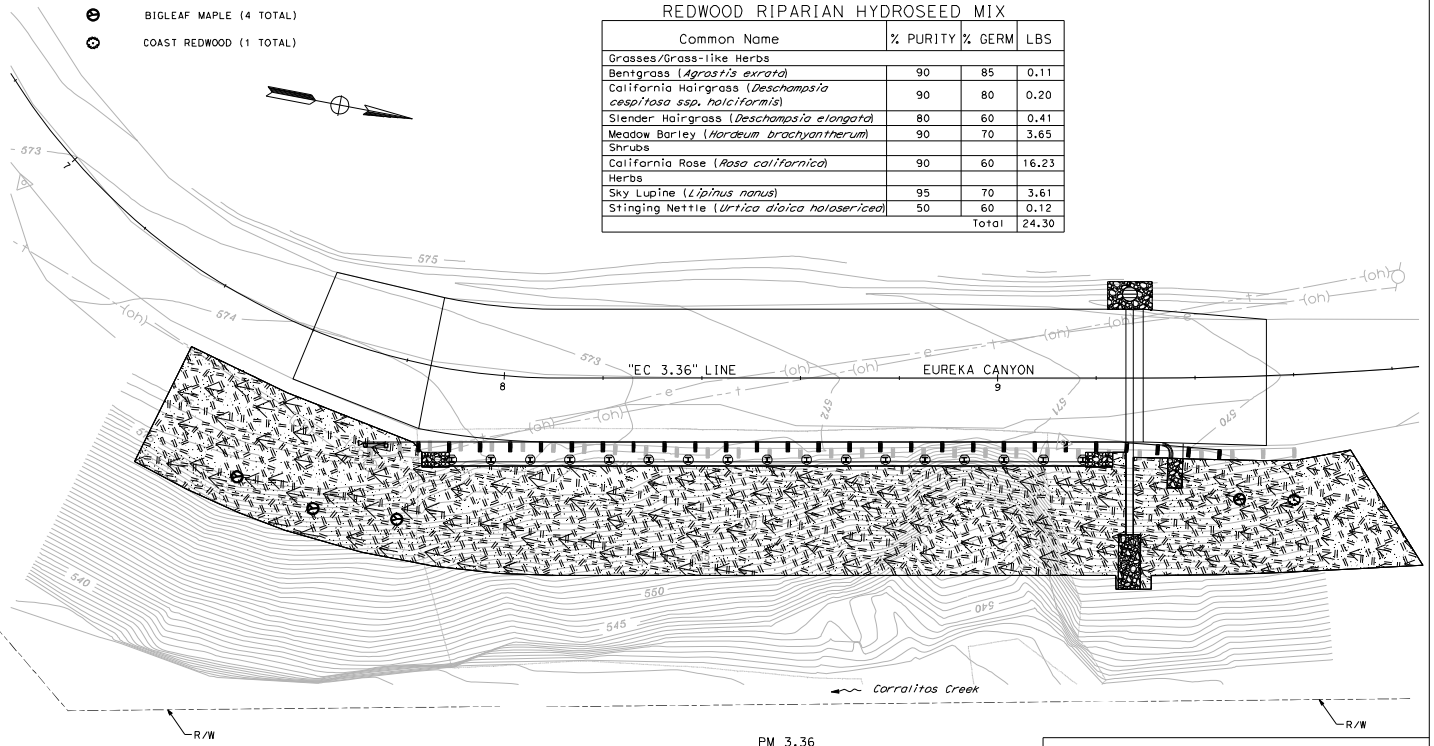

PM 3.36

NOTE:
The Contractor shall verify all controlling field dimensions before ordering or fabricating any material.

PLANTING PLAN

SCALE 1" = 10'

PP-2

RELATIVE BORDER SCALE IS IN INCHES 0 1 2 3

$FILEABBREV

SHEET NAME:

DRAWING NAME:

DOKKEN ENGINEERING
110 Rue Lucine, Suite 200
Santa Cruz, CA 95060
Ph: 831-457-0962 Fax: 831-457-0963

DATE	REVISION	BY

PROJECT ENGINEER
ERIC ESPINOZA

COUNTY OF SANTA CRUZ - DEPARTMENT OF PUBLIC WORKS

EUREKA CANYON - PM 3.36
STORM DAMAGE REPAIR PROJECT

DRAWN: K. MOE
CHECKED: R. GRIGGS
DATE: 2/20/25
SCALE: AS NOTED
JOB NO. P76520

The County or its officers or agents shall not be responsible for the accuracy or completeness of electronic copies of this plan sheet.

LEGEND:

- TEMPORARY HYDROSEED
- FIBER ROLL
- TEMPORARY HIGH-VISIBILITY FENCE

EROSION CONTROL

ITEM	MATERIAL		APPLICATION RATE
	DESCRIPTION	TYPE	
TEMPORARY HYDROSEED	SEED	SEED MIX	70 LB/ACRE
	FIBER	WOOD	2000 LB/ACRE
	NATURAL SLOW RELEASE FERTILIZER	GRANULAR	800 LB/ACRE
	TACKIFIER	PSYLLIUM	100 LB/ACRE

SEED MIX

BOTANICAL NAME	COMMON NAME	LB PURE LIVE SEED PER ACRE
BROMUS CARINATUS	CALIFORNIA BROME	25
ELYMUS GLAUCUS	BLUE WILDRYE	10
VULPIA MICROSTACHYS	THREE WEEKS FESCUE	6
TRIFOLIUM WILDENOVII	TOMCAT CLOVER	4
HORDEUM BRACHYANTHERUM	CALIFORNIA MEADOW BARLEY	25

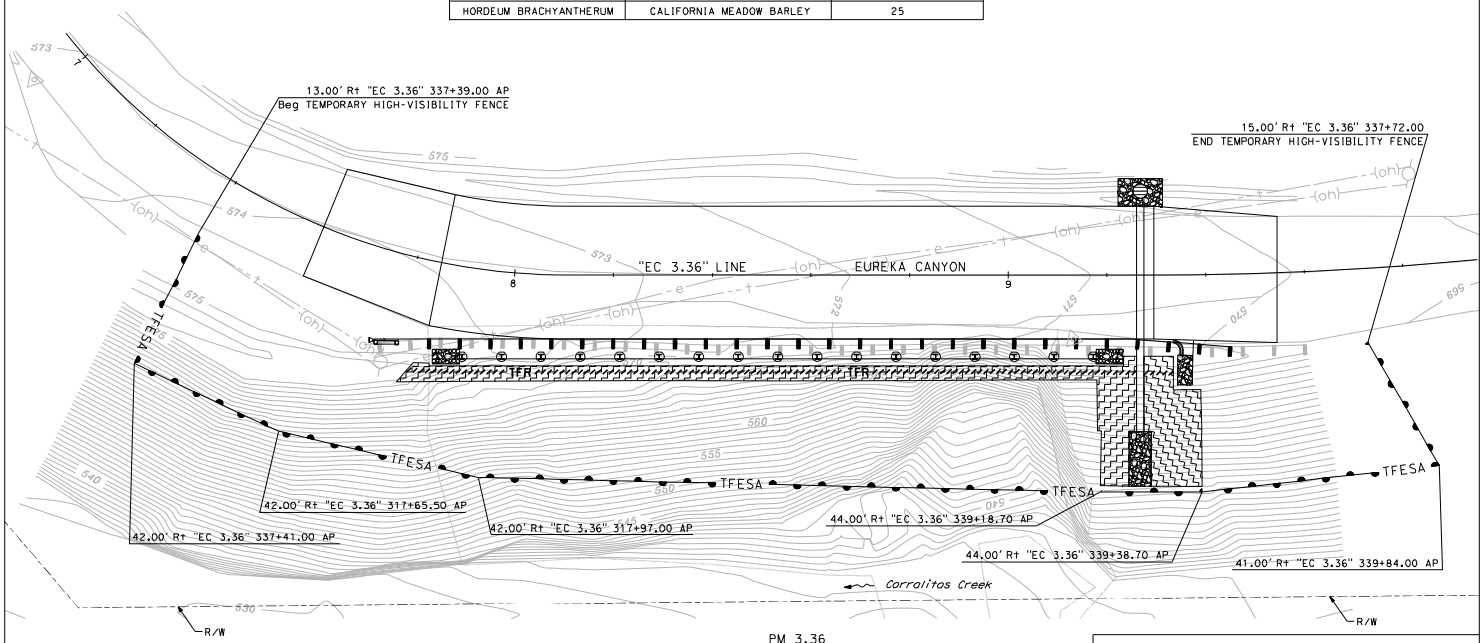

NOTE:
The Contractor shall verify all controlling field dimensions before ordering or fabricating any material.

EROSION CONTROL PLAN

SCALE 1" = 10'

EC-2

RELATIVE BORDER SCALE IS IN INCHES 0 1 2 3 | $FILEABBREV | SHEET NAME: | DRAWING NAME:

DOKKEN ENGINEERING
110 Rue Louis Jones, Suite 200
Moncton, NB E1C 0C9
Ph: 506-855-2422 Fax: 506-855-2423

DATE	REVISION	BY

PROJECT ENGINEER: ERIC ESPINOZA

COUNTY OF SANTA CRUZ – DEPARTMENT OF PUBLIC WORKS

EUREKA CANYON – PM 3.36
STORM DAMAGE REPAIR PROJECT

DRAWN: K. MOE
CHECKED: R. GRIGOS
DATE: 2/20/25
SCALE: AS NOTED
JOB NO. P76520

The County or its officers or agents
shall not be responsible for the accuracy or
completeness of electronic copies of this plan sheet.

QUANTITIES

Item	Total	
STRUCTURE EXCAVATION (SOLDIER PILE WALL)	111	CY
STRUCTURE BACKFILL (SOLDIER PILE WALL)	86	CY
CONCRETE BACKFILL (SOLDIER PILE WALL)	40	CY
LEAN CONCRETE BACKFILL	16	CY
TIEBACK ANCHOR ASSEMBLY (COMPLETE-IN-PLACE)	4	EA
STEEL SOLDIER PILE (HP 12 X 84)	527	LF
24" DRILLED HOLE	504	LF
STEEL WALER (COMPLETE-IN-PLACE)	4	EA
TIMBER LAGGING	1,048	SQFT
CLEAN AND PAINT STEEL SOLDIER PILING AND WALERS	1	LS
GABION	4	CY

CURVE DATA

CURVE	RADIUS	DELTA	TANGENT	LENGTH
1	130.00'	63°51'44"	81.02'	144.90'
2	630.00'	4°26'59"	24.48'	48.93'

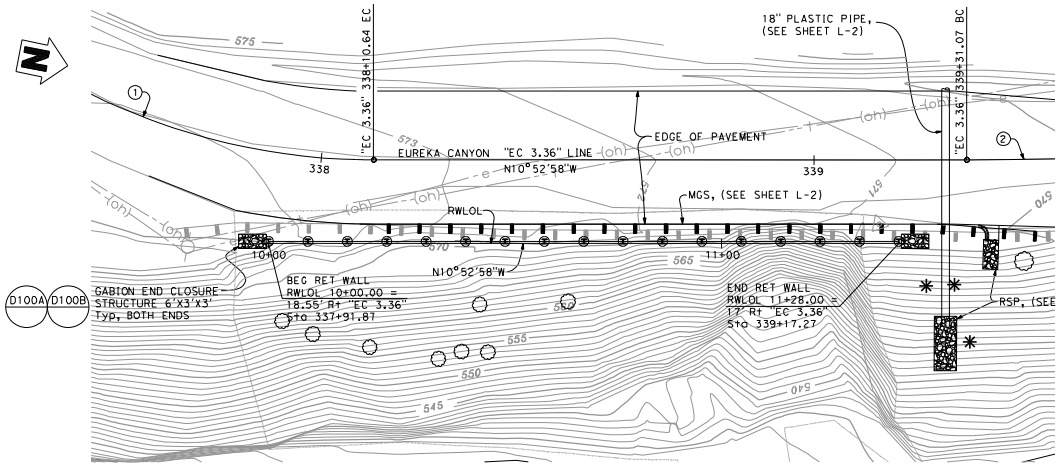

PLAN
1" = 10'

GENERAL NOTES

DESIGN: AASHTO LRFD Bridge Design Specifications, 8th edition with California Amendments, Preface dated November 2019

Standard Plans and Specifications, 2024 edition with Revised Standard Plans, dated Oct 2024.

LIVE LOAD: 240 psf equivalent to 2 feet soil weight

SEISMIC PARAMETERS: Seismic Increment: 14H psf uniform pressure, H is the wall height in feet.

SOIL PARAMETERS: (For determination of Design Lateral Earth Pressures)
Backfill soil weight = 120 lb/ft³
Active Pressure coefficent, Ka = 0.34

STEEL SOLDIER PILES: ASTM A572/A, ASTM 572M Grade 50 Min

CONCRETE: f'c = 4000 psi

STRUCTURAL TIMBER: Treated Douglas Fir, Grade No. 1 or better. Timber to be full sawn. Fbo = 1.20 ksi

WALER, TIE & BEARING PLATES: Fy = 36 ksi

PRESTRESSING STEEL (TIEBACK ANCHORS):
FDL= Factored Design Load on tieback anchor (kips)
FTL=Factored Test Load (kips)
LL=Lock-Off Load (kips)

fpu = Minimum ultimate tensile strength of tieback anchor steel (ksi)

As (Min) = Minimum cross sectional area of steel in tieback anchor. (square inch)

Steel = ASTM designation: A416 (HS Strands)

$$As\ (Min) = \frac{1.0\ FTL}{0.75\ fpu}$$

FDL= 107 Kips

FTL= 107 Kips 1.0 FDL } Per MTD 5-12

LL= 72 Kips 0.67 FDL } Per MTD 5-12

LEGEND:

- REMOVE TREE (SEE SHEET L-2)
- TREE TO REMAIN IN PLACE (SEE SHEET L-2)
- Standard Plan sheet number
- Detail number

NOTE:
The Contractor shall verify all controlling field dimensions before ordering or fabricating any material.

GENERAL PLAN

S-7

RELATIVE BORDER SCALE IS IN INCHES 0 1 2 3

$FILEABBREV

SHEET NAME:

DRAWING NAME:

DOKKEN ENGINEERING
113 BLUE ALVARADO, SUITE 200
PH: 916-635-0540 FAX: 916-635-0543

REVISION	DATE	BY

REGISTERED PROFESSIONAL ENGINEER
DAVID J. YANG
No. 3413
Exp. 6-30-26
CIVIL
STATE OF CALIFORNIA

PROJECT ENGINEER
ROSA GRIGGS

COUNTY OF SANTA CRUZ – DEPARTMENT OF PUBLIC WORKS

EUREKA CANYON ROAD – PM 3.36
STORM DAMAGE REPAIR PROJECT

DRAWN: D. YANG
CHECKED: G. MORALES
DATE: 2/20/2025
SCALE: AS NOTED
JOB NO. P76520
SHEET 21 OF 51

The County or its officers or agents
shall not be responsible for the accuracy or
completeness of electronic copies of this plan sheet.

DOKKEN ENGINEERING
113 Blue Ravine Road, Suite 200
Folsom, California 95630
Ph: 916.358.3043 Fax: 916.358.3045

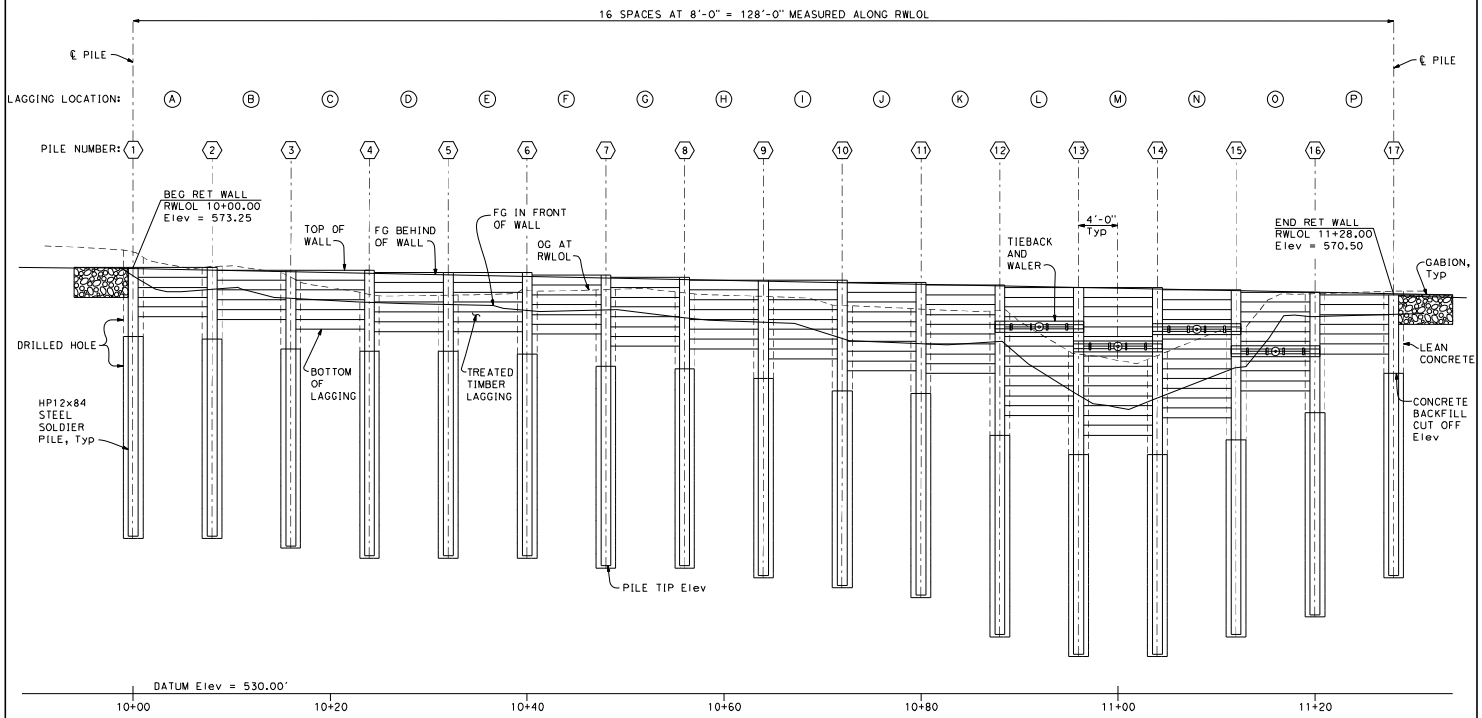

NOTE:
The Contractor shall verify all controlling field dimensions before ordering or fabricating any material.

DEVELOPED ELEVATION

1" = 5'

SOLDIER PILE ELEVATION

S-8

RELATIVE BORDER SCALE IS IN INCHES 0 1 2 3 | $FILEABBREV | SHEET NAME: | DRAWING NAME:

DATE	REVISION	BY

PROFESSIONAL ENGINEER — REGISTERED — No. 71343 — Exp. 6-30-26 — CIVIL — STATE OF CALIFORNIA

PROJECT ENGINEER: ROSA GRIGGS

COUNTY OF SANTA CRUZ – DEPARTMENT OF PUBLIC WORKS

EUREKA CANYON ROAD – PM 3.36
STORM DAMAGE REPAIR PROJECT

DRAWN: D. YANG
CHECKED: G. MORALES
DATE: 2/20/2025
SCALE: AS NOTED
JOB NO. P76520
SHEET 22 OF 51

The County or its officers or agents
shall not be responsible for the accuracy or
completeness of electronic copies of this plan sheet.

DOKKEN ENGINEERING
110 BLUE RIDGE ROAD, SUITE 200
MORGAN HILL, CA 95037
PH: 510-420-0412 FAX: 510-420-0445

SOLDIER PILE DATA

PILE NUMBER	STATION ALONG RWLOL	PILE TIP ELEVATION	CONC BACKFILL CUT OFF ELEVATION	TOP OF PILE ELEVATION
1	10+00.00	546.00	566.25	573.25
2	10+08.00	546.00	566.00	573.25
3	10+16.00	545.00	565.00	573.00
4	10+24.00	544.00	564.75	573.00
5	10+32.00	544.00	564.75	572.75
6	10+40.00	544.00	564.50	572.75
7	10+48.00	543.00	563.25	572.50
8	10+56.00	543.00	563.00	572.25
9	10+64.00	542.00	562.00	572.00
10	10+72.00	541.00	561.75	572.00
11	10+80.00	540.00	560.50	571.75
12	10+88.00	536.00	556.25	571.50
13	10+96.00	534.00	554.25	571.25
14	11+04.00	534.00	554.25	571.25
15	11+12.00	536.00	556.00	571.00
16	11+20.00	538.00	558.75	570.75
17	11+28.00	542.00	562.50	570.50

TIEBACK AND LAGGING TABLE

LOCATION	TIEBACK STATION ALONG RWLOL	TIEBACK ELEVATION AT RWLOL	TOP OF LAGGING ELEVATION	BOTTOM OF LAGGING ELEVATION
A	N/A	N/A	573.25	568.25
B	N/A	N/A	573.00	568.00
C	N/A	N/A	573.00	567.00
D	N/A	N/A	572.75	566.75
E	N/A	N/A	572.75	566.75
F	N/A	N/A	572.50	566.50
G	N/A	N/A	572.25	565.25
H	N/A	N/A	572.00	565.00
I	N/A	N/A	572.00	564.00
J	N/A	N/A	571.75	562.75
K	N/A	N/A	571.50	562.50
L	10+92.00	567.25	571.25	558.25
M	11+00.00	565.25	571.25	556.25
N	11+08.00	567.00	571.00	558.00
O	11+16.00	564.75	570.75	560.75
P	N/A	N/A	570.50	564.50

NOTE:
The Contractor shall verify all
controlling field dimensions before
ordering or fabricating any material.

SOLDIER PILE DATA TABLES
S-9

RELATIVE BORDER SCALE IS IN INCHES 0 1 2 3 | $FILEABBREV | SHEET NAME: | DRAWING NAME:

DATE	REVISION	BY

REGISTERED PROFESSIONAL ENGINEER
ROSA GRIGGS
No. 3413
Exp. 6-30-26
CIVIL
STATE OF CALIFORNIA

PROJECT ENGINEER
ROSA GRIGGS

COUNTY OF SANTA CRUZ – DEPARTMENT OF PUBLIC WORKS
EUREKA CANYON ROAD – PM 3.36
STORM DAMAGE REPAIR PROJECT

DRAWN: D. YANG
CHECKED: G. MORALES
DATE: 2/20/2025
SCALE: AS NOTED
JOB NO. P76520
SHEET

The County or its officers or agents shall not be responsible for the accuracy or completeness of electronic copies of this plan sheet.

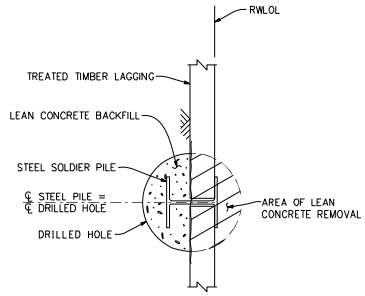

PILE SECTION B-B

NO SCALE

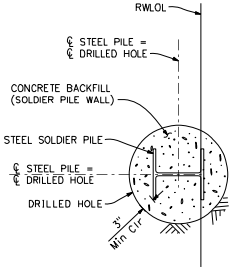

PILE SECTION C-C

NO SCALE

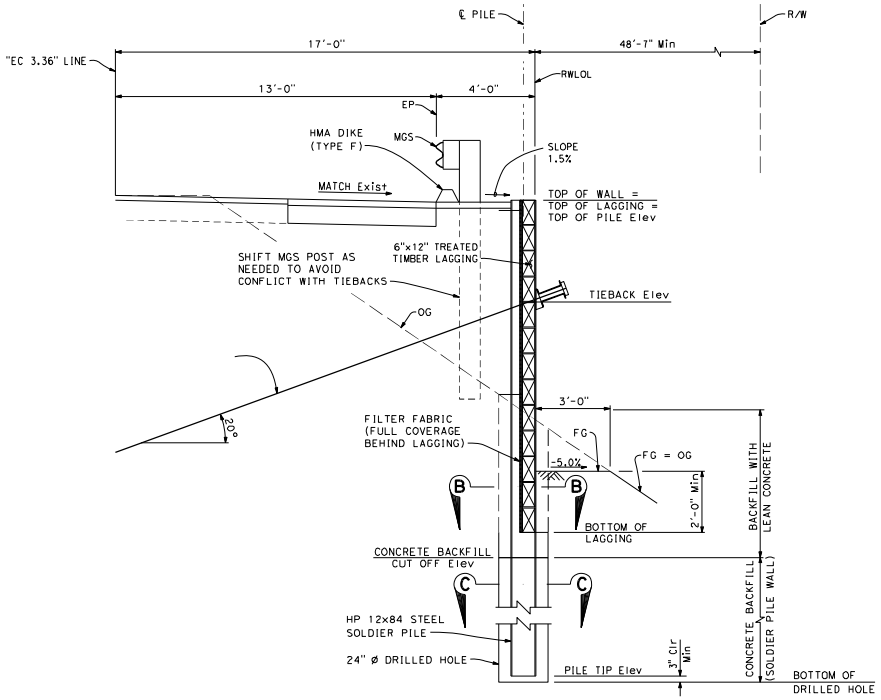

TYPICAL SECTION

1/2" = 1'-0"

NOTES:

1. For lagging details, see "RETAINING WALL DETAILS" sheet S-11.
2. For tieback and waler details, see "TIEBACK DETAILS" sheet S-12.
3. Clean and paint steel soldier pile from top of pile to 5 feet min below bottom of lagging.

NOTE:
The Contractor shall verify all controlling field dimensions before ordering or fabricating any material.

DOKKEN ENGINEERING
110 Blue Ravine Road, Suite 200
Folsom, CA 95630
Ph: 916.608.9882 Fax: 916.608.9883

TYPICAL SECTION

S-10

RELATIVE BORDER SCALE IS IN INCHES 0 1 2 3

$FILEABBREV

SHEET NAME:

DRAWING NAME:

BY	REVISION	DATE

PROJECT ENGINEER: ROSA GRIGGS

COUNTY OF SANTA CRUZ – DEPARTMENT OF PUBLIC WORKS

EUREKA CANYON ROAD – PM 3.36
STORM DAMAGE REPAIR PROJECT

DRAWN: D. YANG
CHECKED: G. MORALES
DATE: 2/20/2025
SCALE: AS NOTED
JOB NO. P76520

The County or its officers or agents
shall not be responsible for the accuracy or
completeness of electronic copies of this plan sheet.

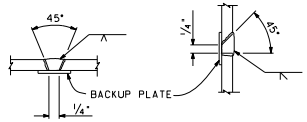

SINGLE VEE-GROOVE **SINGLE BEVEL-GROOVE**

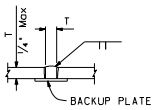

SQUARE GROOVE

Notes:
1. Single vee-groove and square groove permitted for all positions.
2. Single bevel-groove permitted for horizontal joints only.

PILE WELDING DETAIL - BUTT JOINTS

NO SCALE

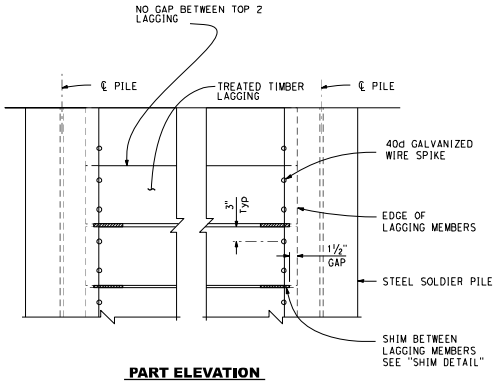

PART ELEVATION

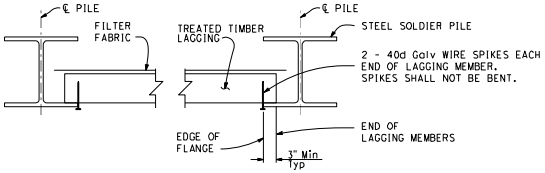

PART PLAN

LAGGING DETAILS

no scale

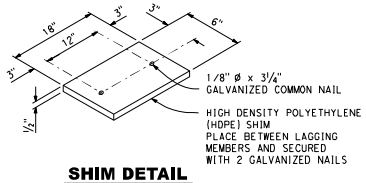

SHIM DETAIL

NO SCALE

NOTES:
1. Clean and paint all exposed surfaces of walers.
2. No clipping of timber lagging corners allowed.

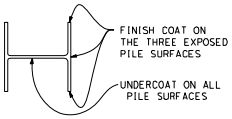

LIMITS OF CLEAN AND PAINT STEEL SOLDIER PILE

NO SCALE

NOTE:
The Contractor shall verify all controlling field dimensions before ordering or fabricating any material.

RETAINING WALL DETAILS
S-11

RELATIVE BORDER SCALE IS IN INCHES 0 1 2 3

$FILEABBREV

SHEET NAME:

DRAWING NAME:

DOKKEN ENGINEERING
110 BLUE RIVER ROAD, SUITE 200
PH: 916-635-9040 FAX: 916-635-9043

REVISION	DATE	BY

REGISTERED PROFESSIONAL ENGINEER
GREGORY MORALES
No. 3413
Exp. 6-30-26
CIVIL
STATE OF CALIFORNIA

COUNTY OF SANTA CRUZ – DEPARTMENT OF PUBLIC WORKS

PROJECT ENGINEER: ROSA GRIGGS

EUREKA CANYON ROAD – PM 3.36
STORM DAMAGE REPAIR PROJECT

DRAWN: D. YANG
CHECKED: G. MORALES
DATE: 2/20/2025
SCALE: AS NOTED
JOB NO. P76520

The County or its officers or agents shall not be responsible for the accuracy or completeness of electronic copies of this plan sheet.

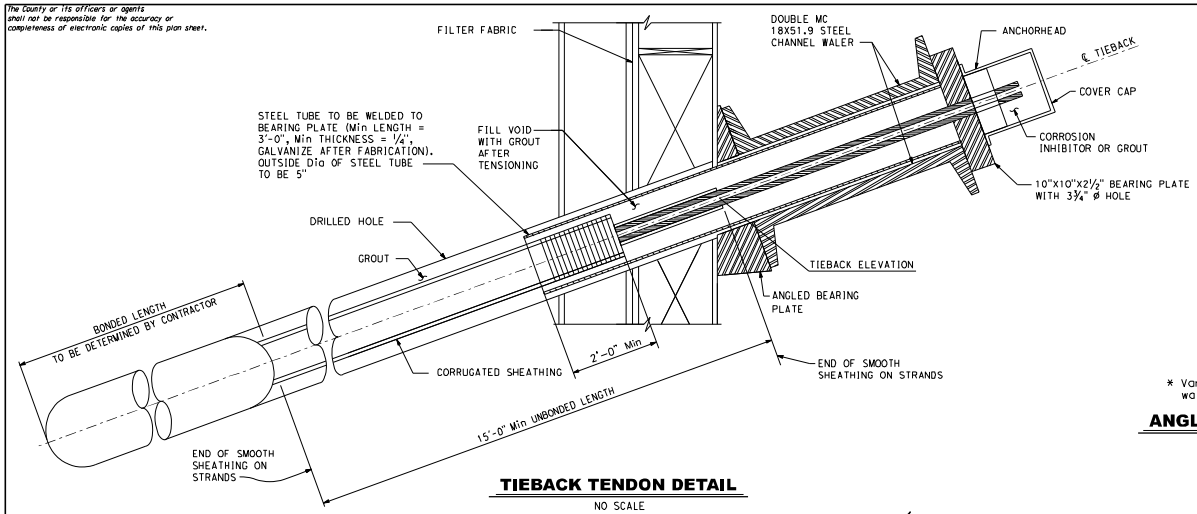

TIEBACK TENDON DETAIL

NO SCALE

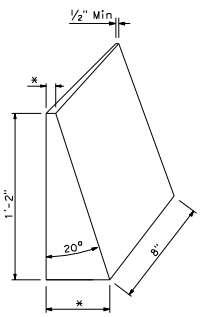

* Vary thickness as needed to ensure waler lays flat in curved portions

ANGLED BEARING PLATE DETAIL ISOMETRIC VIEW

NO SCALE

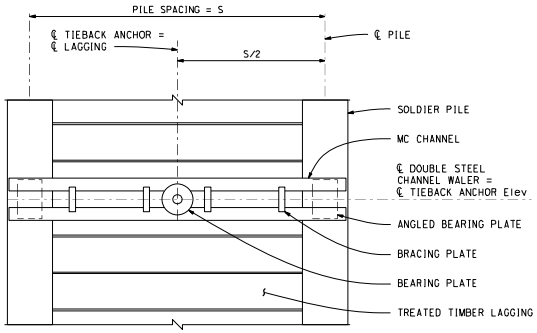

DOUBLE STEEL CHANNEL WALER ELEVATION

NO SCALE

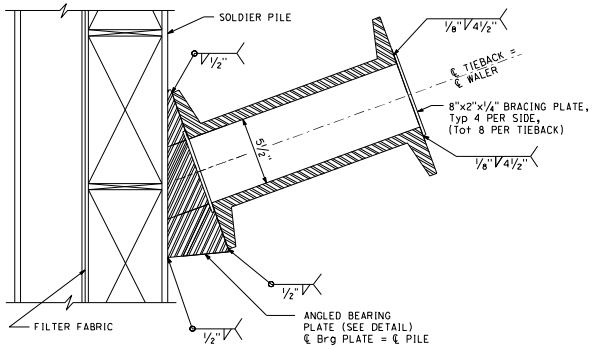

DOUBLE STEEL CHANNEL WALER SECTION

NO SCALE

NOTE:
1. Clean and paint all exposed surfaces of walers.

NOTE:
The Contractor shall verify all controlling field dimensions before ordering or fabricating any material.

TIEBACK DETAILS

S-12

RELATIVE BORDER SCALE IS IN INCHES 0 1 2 3 | $FILEABBREV | SHEET NAME: | DRAWING NAME:

DOKKEN ENGINEERING
110 BLUE RIDGE, SUITE 200
Phone: 916-366-2037 Fax: 916-366-2040

REVISION	DATE	BY

PROJECT ENGINEER: ROSA GRIGGS

COUNTY OF SANTA CRUZ – DEPARTMENT OF PUBLIC WORKS

EUREKA CANYON ROAD – PM 3.36
STORM DAMAGE REPAIR PROJECT

DRAWN: D. YANG
CHECKED: G. MORALES
DATE: 2/20/2025
SCALE: AS NOTED
JOB NO. P76520
SHEET 26 OF 51

The County or its officers or agents
shall not be responsible for the accuracy or
completeness of electronic copies of this plan sheet.

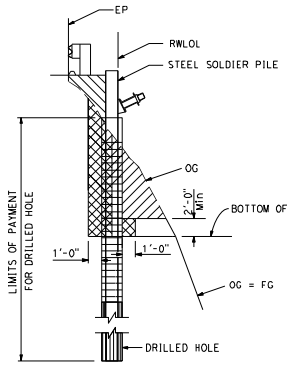

AT STEEL PILES

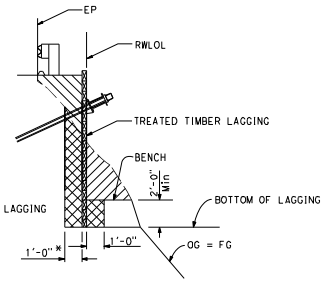

AT TIMBER LAGGING

CONSTRUCTION SEQUENCE

1. DRILL HOLES.
2. INSTALL SOLDIER PILES.
3. PLACE CONCRETE BACKFILL AND LEAN CONCRETE PER TYPICAL SECTION.
4. EXCAVATE (5' MAX LIFTS) AS NEEDED, THEN INSTALL LAGGING. DO NOT EXCAVATE MORE THAN 3 FEET BELOW ANY LEVEL OF TIEBACKS THAT HAVE NOT BEEN STRESSED AND GROUTED.
5. INSTALL TIMBER LAGGING AND BACKFILL CONCURRENTLY BEHIND WALL FROM OG TO FG.
6. INSTALL TIEBACKS & WALERS.
7. TENSION TIEBACK ASSEMBLIES.
8. CONTINUE EXCAVATION AND TIMBER LAGGING INSTALLATION TO BOTTOM OF LAGGING ELEVATION.

LEGEND:

- STRUCTURE EXCAVATION (SOLDIER PILE WALL) **
- STRUCTURE BACKFILL (SOLDIER PILE WALL)
- LEAN CONCRETE BACKFILL
- CONCRETE BACKFILL (SOLDIER PILE WALL)

* FOR ESTIMATING PURPOSES ONLY, CARE SHALL BE TAKEN DURING EXCAVATION SUCH THAT A MINIMUM VOID IS EXCAVATED.

** INCLUDES REMOVAL OF LEAN CONCRETE AS SHOWN ON "SECTION B-B" OF "TYPICAL SECTION" SHEET S-10.

LIMITS OF PAYMENT FOR EXCAVATION AND BACKFILL

NO SCALE

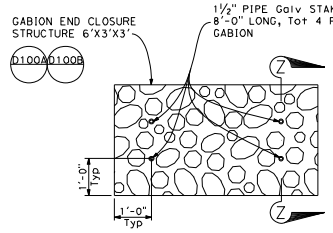

PLAN

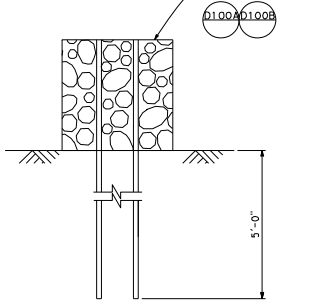

SECTION Z-Z

GABION STAKING DETAILS

NO SCALE

NOTE:
The Contractor shall verify all controlling field dimensions before ordering or fabricating any material.

MISCELLANEOUS DETAILS
S-13

RELATIVE BORDER SCALE IS IN INCHES 0 1 2 3

$FILEABBREV

SHEET NAME:

DRAWING NAME:

DOKKEN ENGINEERING
110 BLUE RUNN ROAD, SUITE 200
SACRAMENTO, CA 95819
PH: 916.362.2041 FAX: 916.362.0445

DATE	REVISION	BY

REGISTERED PROFESSIONAL ENGINEER
No. 3413
Exp. 6-30-26
CIVIL
STATE OF CALIFORNIA

PROJECT ENGINEER: ROSA GRIGGS

COUNTY OF SANTA CRUZ – DEPARTMENT OF PUBLIC WORKS

EUREKA CANYON ROAD – PM 3.36
STORM DAMAGE REPAIR PROJECT

DRAWN: D. YANG
CHECKED: G. MORALES
DATE: 2/20/2025
SCALE: AS NOTED
JOB NO. P76520

The County or its officers or agents shall not be responsible for the accuracy or completeness of electronic copies of this plan sheet.

LEGEND:

- CURVE NUMBER
- TRAFFIC LINE DETAIL
- NEW STRUCTURAL SECTION
- LONGITUDINAL CONFORM
- DEBRIS REMOVAL/CLEAN DITCH
- REMOVE TREE
- TREE TO REMAIN IN PLACE

NOTES:

1. PROVIDE SECONDARY CONTAINMENT IN COMBINATION WITH PRIMARY CONTAINMENT IF STAGING AREAS ARE WITHIN 100 FEET FROM A WATERBODY. SECONDARY CONTAINMENT MAY BE IN THE FORM OF A SOIL BERM, PLASTIC COVERED GRAVEL BAGS, OR SIMILAR IMPERVIOUS FEATURE THAT PREVENTS LIQUIDS FROM FLOWING OFF OF THE STAGING AREA.

CURVE DATA

No.	R	Δ	T	L
1	540.00'	19°45'11"	94.02'	186.17'

DOKKEN ENGINEERING
110 Rue Cuyler Street, Suite 200
Fresno, California 93721
Ph: 559.445.0832 Fax: 559.445.0843

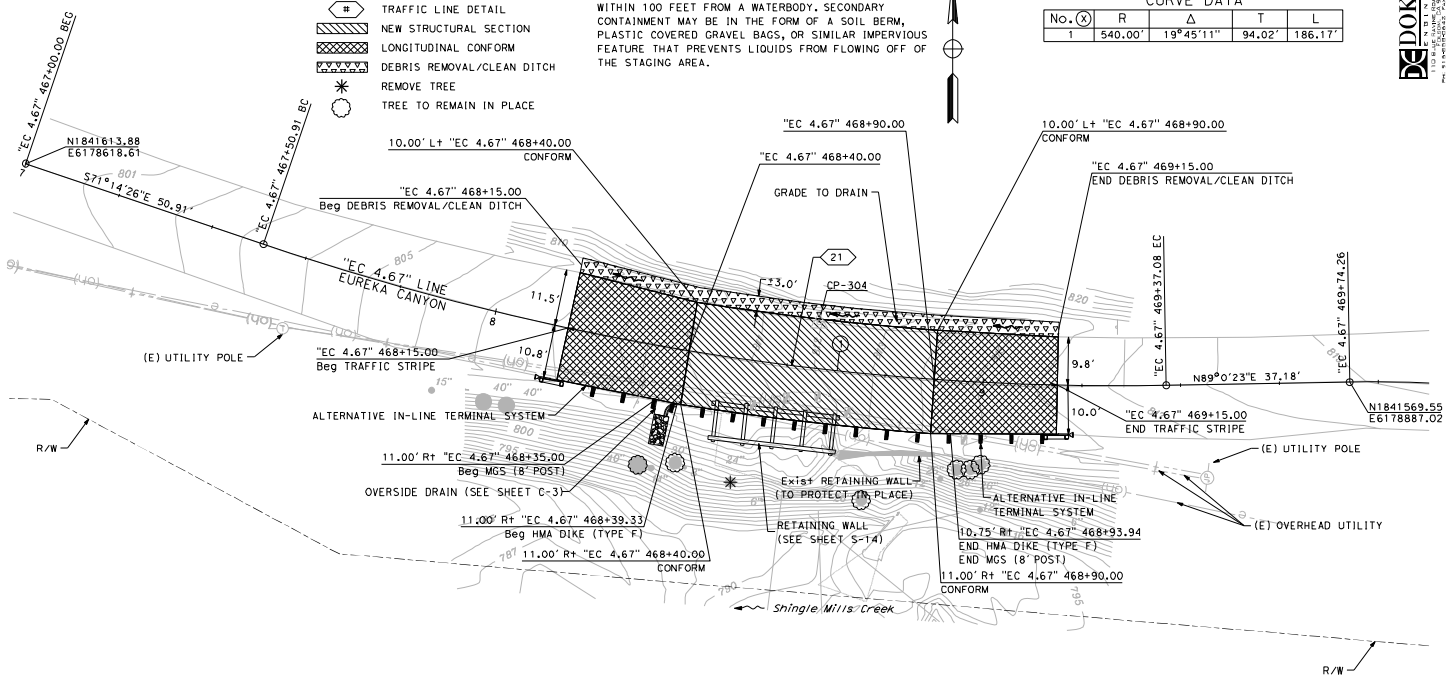

PROJECT CONTROL							
No	NORTHING	EASTING	ELEV	LINE	STATION	OFFSET	DESCRIPTION
304	1841581.65	6178779.48	811.99	"EC 4.67"	468+65.50	9.31' Rt	CNAIL

DATUM NOTE
HORIZONTAL DATUM: NAD 83 CALIFORNIA ZONE 3
VERTICAL DATUM: NAVD 88

PM 4.67

NOTE:
The Contractor shall verify all controlling field dimensions before ordering or fabricating any material.

LAYOUT

SCALE 1" = 10'

L-3

RELATIVE BORDER SCALE IS IN INCHES 0 1 2 3 | #FILEABBREV | SHEET NAME: | DRAWING NAME:

DATE	REVISION	BY

PROJECT ENGINEER: ERIC ESPINOZA

COUNTY OF SANTA CRUZ – DEPARTMENT OF PUBLIC WORKS

EUREKA CANYON – PM 4.67
STORM DAMAGE REPAIR PROJECT

DRAWN: K. MOE
CHECKED: R. GRIGGS
DATE: 2/20/25
SCALE: AS NOTED
JOB NO. P76779

The County or its officers or agents shall not be responsible for the accuracy or completeness of electronic copies of this plan sheet.

LEGEND:

- COLD PLANE ASPHALT CONCRETE PAVEMENT
- ROCK SLOPE PROTECTION
- DEBRIS REMOVAL/CLEAN DITCH

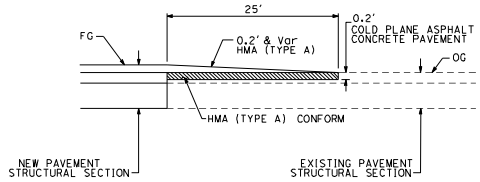

LONGITUDINAL CONFORM DETAIL

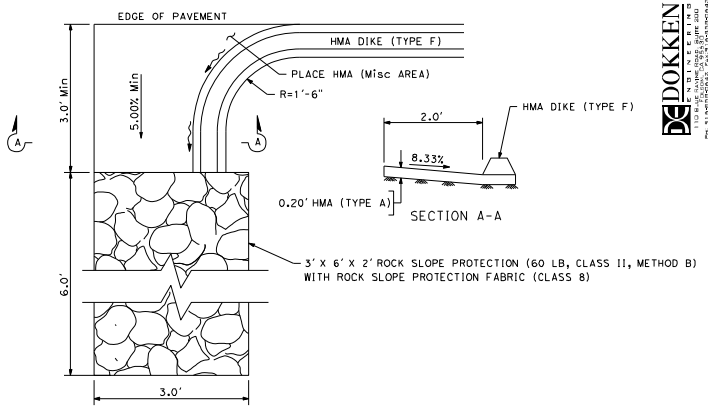

OVERSIDE DRAIN DETAIL

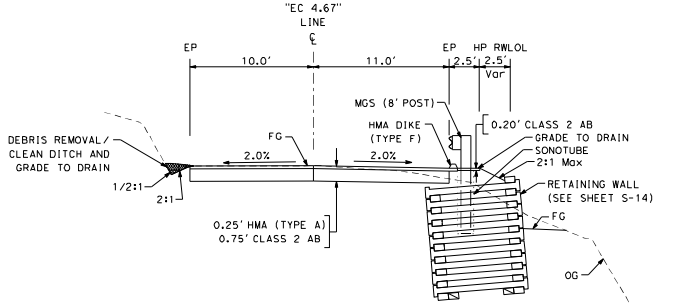

TYPICAL SECTION - PM 4.67

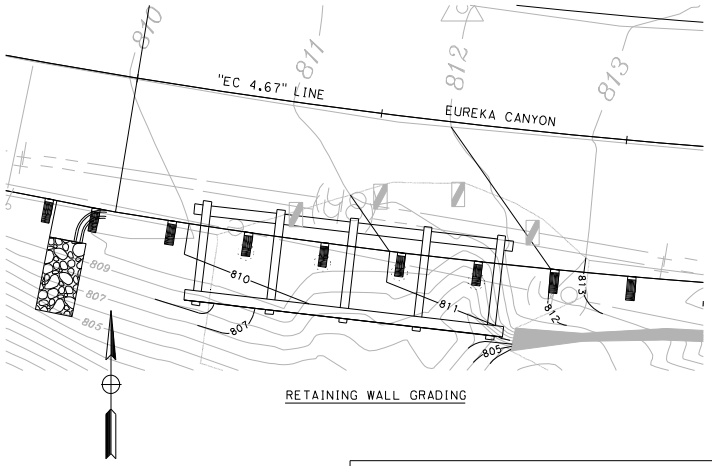

RETAINING WALL GRADING

NOTE:
The Contractor shall verify all controlling field dimensions before ordering or fabricating any material.

CONSTRUCTION DETAILS

NO SCALE

C-3

RELATIVE BORDER SCALE IS IN INCHES 0 1 2 3

#FILEABBREV

SHEET NAME:

DRAWING NAME:

DOKKEN ENGINEERING
110 Rue Cuyler, Suite 200
Lafayette, CA 94549
Ph: 510.845.7549 Fax: 925.297.5779

DATE	REVISION	BY

PROJECT ENGINEER
ERIC ESPINOZA

COUNTY OF SANTA CRUZ - DEPARTMENT OF PUBLIC WORKS

EUREKA CANYON - PM 4.67
STORM DAMAGE REPAIR PROJECT

DRAWN: K. MOE
CHECKED: R. GRIGGS
DATE: 2/20/25
SCALE: AS NOTED
JOB NO. P76779

The County or its officers or agents shall not be responsible for the accuracy or completeness of electronic copies of this plan sheet.

LEGEND:

- TEMPORARY HMA (TYPE A) WIDENING
- DIRECTION OF TRAFFIC
- TWO WAY TRAFFIC (ONE LANE)
- CONSTRUCTION AREA SIGN

STAGE 1:

1. UNDER TRAFFIC CONTROL, CONSTRUCT TEMPORARY WIDENING
2. SET UP TRAFFIC HANDLING
3. CONSTRUCT RETAINING WALL
4. CONSTRUCT ROADWAY STRUCTURAL SECTION

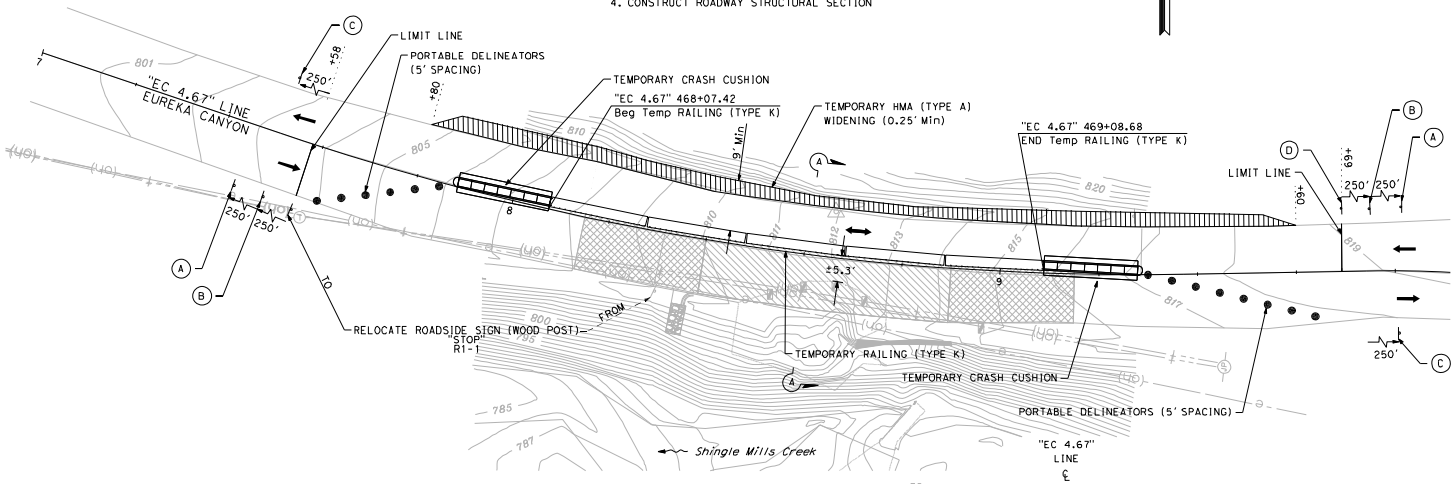

CONSTRUCTION AREA SIGNS QUANTITY TABLE

SIGN	SIGN CODE	PANEL SIZE	MESSAGE	No. AND SIZE OF POSTS	(N) No. OF SIGNS
A	W20-1	36" X 36"	ROAD WORK AHEAD	1 - 4" x 6"	2
B	W20-4	36" X 36"	ONE LANE ROAD AHEAD	1 - 4" x 6"	2
C	G20-2	36" X 18"	END ROAD WORK	1 - 4" x 6"	2
D	R1-1	36" X 36"	STOP	1 - 4" x 6"	1

PM 4.67

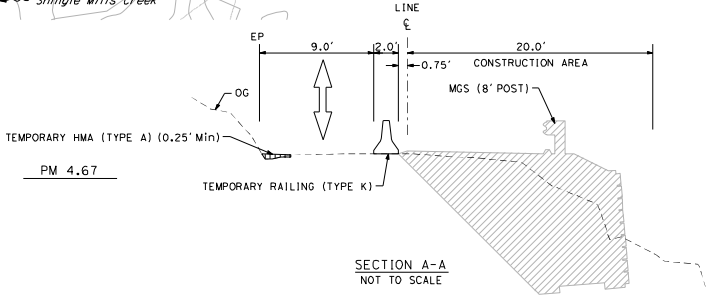

SECTION A-A
NOT TO SCALE

NOTE:
The Contractor shall verify all controlling field dimensions before ordering or fabricating any material.

TRAFFIC HANDLING PLAN
SCALE 1" = 10'
TH-3A

RELATIVE BORDER SCALE IS IN INCHES 0 1 2 3 | #FILEABBREV | SHEET NAME: | DRAWING NAME:

DOKKEN ENGINEERING
110 Rue Lione Road, Suite 200
Santa Cruz, CA 95060
Ph: 831.457.0962 Fax: 831.457.0963

DATE	REVISION	BY

PROJECT ENGINEER
ERIC ESPINOZA

COUNTY OF SANTA CRUZ - DEPARTMENT OF PUBLIC WORKS
EUREKA CANYON - PM 4.67
STORM DAMAGE REPAIR PROJECT

DRAWN: K. MOE
CHECKED: R. GRIGGS
DATE: 2/20/25
SCALE: AS NOTED
JOB NO. P76779

The County or its officers or agents shall not be responsible for the accuracy or completeness of electronic copies of this plan sheet.

LEGEND:

- DIRECTION OF TRAFFIC
- TWO WAY TRAFFIC (ONE LANE)
- CONSTRUCTION AREA SIGN

STAGE 2:

1. SHIFT TRAFFIC HANDLING
2. REMOVE TEMPORARY HMA (TYPE A) WIDENING
3. CONSTRUCT ROADWAY STRUCTURAL SECTION
4. UNDER TRAFFIC CONTROL, REMOVE TRAFFIC HANDLING AND COMPLETE STRIPING.

DOKKEN ENGINEERING
110 Blue Ridge Drive, Suite 200
Santa Cruz, CA 95060
Ph: 831-457-0962 Fax: 831-457-0963

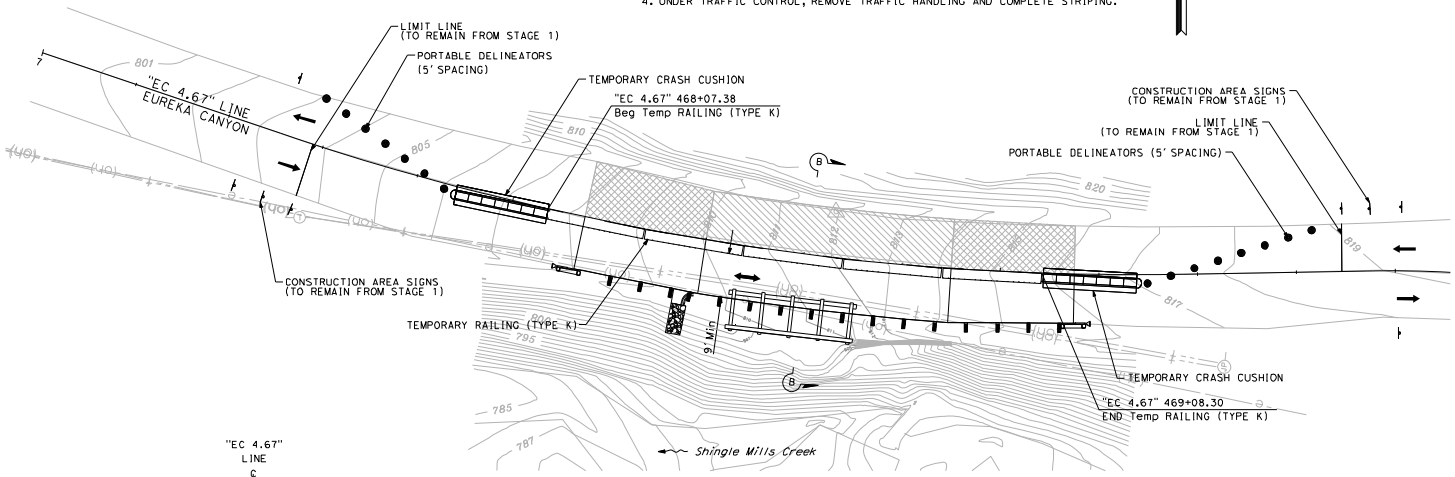

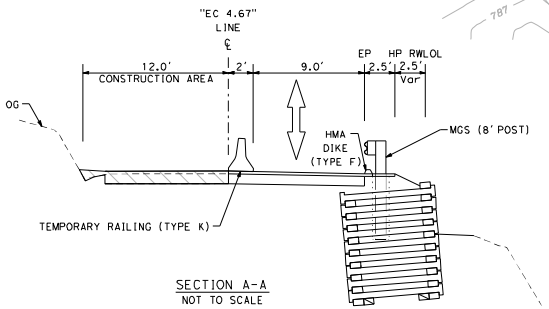

SECTION A-A
NOT TO SCALE

NOTE:
The Contractor shall verify all controlling field dimensions before ordering or fabricating any material.

TRAFFIC HANDLING PLAN
SCALE 1" = 10'
TH-3B

RELATIVE BORDER SCALE IS IN INCHES 0 1 2 3 | #FILEABBREV | SHEET NAME: | DRAWING NAME:

DATE	REVISION	BY

PROJECT ENGINEER
ERIC ESPINOZA

COUNTY OF SANTA CRUZ - DEPARTMENT OF PUBLIC WORKS
EUREKA CANYON – PM 4.67
STORM DAMAGE REPAIR PROJECT

DRAWN: K. MOE
CHECKED: R. GRIGGS
DATE: 2/20/25
SCALE: AS NOTED
JOB NO. P76779

The County or its officers or agents shall not be responsible for the accuracy or completeness of electronic copies of this plan sheet.

ROADWAY ITEMS - PM 4.67

ITEM	CLASS 2 AGGREGATE BASE	HOT MIX ASPHALT (TYPE A)	COLD PLANE ASPHALT CONCRETE PAVEMENT	ROADWAY EXCAVATION	ALTERNATIVE IN-LINE TERMINAL SYSTEM	MIDWEST GUARDRAIL SYSTEM (8' POST)	PLACE HMA DIKE (TYPE F)	PLACE HOT MIX ASPHALT (MISCELLANEOUS AREA)	6" THERMOPLASTIC TRAFFIC STRIPE	ROCK SLOPE PROTECTION (60 LB, CLASS II, METHOD B)	ROCK SLOPE PROTECTION FABRIC (CLASS B)	DEBRIS REMOVAL/CLEAN DITCH	RELOCATE ROADSIDE SIGN (WOOD POST)	HYDROSEED	DUFF	TEMPORARY HYDROSEED	FIBER ROLLS	TEMPORARY HIGH-VISIBILTY FENCE	REMOVE TREE
	CY	TON	SQYD	CY	EA	LF	LF	SQYD	LF	CY	SQYD	CY	EA	SQFT	SQFT	SQYD	LF	LF	EA
"EC 4.67"	30	36	117	26	2	60	56	1	200	2	6	33	1	2579	2579	22	30	213	1

TRAFFIC HANDLING ITEMS - PM 4.67

ITEM	CONSTRUCTION STAGE	TEMPORARY CRASH CUSHION	TEMPORARY RAILING (TYPE K)	PORTABLE DELINEATOR	TEMP PAVEMENT MARKING (PAINT)	HOT MIX ASPHALT (TYPE A)
		EA	LF	EA	SQFT	TON
"EC 5.05"	1	2	100	14	21	10
	2	2	100	15		-

NOTE:
The Contractor shall verify all controlling field dimensions before ordering or fabricating any material.

SUMMARY OF QUANTITIES

NO SCALE

Q-3

RELATIVE BORDER SCALE IS IN INCHES 0 1 2 3

#FILEABBREV

SHEET NAME:

DRAWING NAME:

DOKKEN ENGINEERING
110 Blue Ridge, Suite 200
Morgan Hill, CA 95037
Ph: 831.601.0640 Fax: 831.601.0645

DATE	REVISION	BY

PROJECT ENGINEER
ERIC ESPINOZA

COUNTY OF SANTA CRUZ - DEPARTMENT OF PUBLIC WORKS

EUREKA CANYON – PM 4.67
STORM DAMAGE REPAIR PROJECT

DRAWN: K. MOE
CHECKED: R. GRIGGS
DATE: 2/20/25
SCALE: AS NOTED
JOB NO. P76779

The County or its officers or agents shall not be responsible for the accuracy or completeness of electronic copies of this plan sheet.

LEGEND:

- REDWOOD RIPARIAN HYDROSEED MIX
- RIPARIAN FERN PLANTINGS - SEE TABLE
- DUFF
- BIGLEAF MAPLE (4 TOTAL)
- COAST REDWOOD (3 TOTAL)

REDWOOD RIPARIAN HYDROSEED MIX

Common Name	% PURITY	% GERM	LBS
Grasses/Grass-like Herbs			
Bentgrass (*Agrostis exrata*)	90	85	0.11
California Hairgrass (*Deschampsia cespitosa ssp. holciformis*)	90	80	0.20
Slender Hairgrass (*Deschampsia elongata*)	80	60	0.41
Meadow Barley (*Hordeum brachyantherum*)	90	70	3.65
Shrubs			
California Rose (*Rosa californica*)	90	60	16.23
Herbs			
Sky Lupine (*Lipinus nanus*)	95	70	3.61
Stinging Nettle (*Urtica dioica holosericea*)	50	60	0.12
		Total	24.30

RIPARIAN PLANTINGS

Scientific Name	Common Name	SIZE	Quantity	Spacing
Trees				
Acer macrophyllum	Bigleaf Maple	One Gallon	4	SEE PLAN
Sequoia sempervirens	Coast Redwood	One Gallon	3	SEE PLAN
Vasculars				
Carex angustata	Common Ladyfern	Container	16	4 FT
Adiantum pedotum l.	Five Finger Maidenhair	Container	16	4 FT
Polystichum munitum	Western Sword Fern	Container	16	4 FT

DOKKEN ENGINEERING
110 Rue Lione Road, Suite 200
Santa Cruz, CA 95060
Ph: 831.426.9555 Fax: 831.426.9557

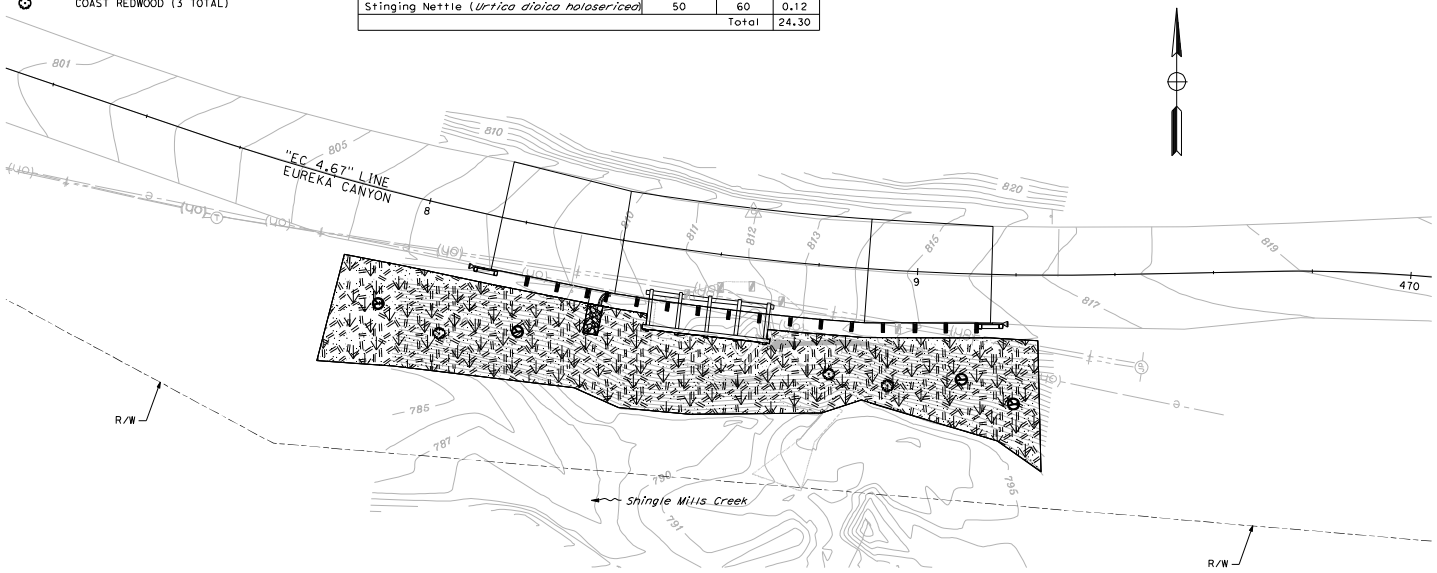

NOTES:

1. PLANTINGS WITHIN 10 FEET OF ROADWAY SHALL BE CAGED.

PM 4.67

NOTE:
The Contractor shall verify all controlling field dimensions before ordering or fabricating any material.

PLANTING PLAN

SCALE 1" = 10'

PP-3

RELATIVE BORDER SCALE IS IN INCHES 0 1 2 3

$FILEABBREV

SHEET NAME:

DRAWING NAME:

DATE	REVISION	BY

PROJECT ENGINEER
ERIC ESPINOZA

COUNTY OF SANTA CRUZ - DEPARTMENT OF PUBLIC WORKS

EUREKA CANYON – PM 4.67
STORM DAMAGE REPAIR PROJECT

DRAWN: K. MOE
CHECKED: R. GRIGGS
DATE: 2/20/25
SCALE: AS NOTED
JOB NO. P76779

The County or its officers or agents shall not be responsible for the accuracy or completeness of electronic copies of this plan sheet.

LEGEND:

- TEMPORARY HYDROSEED
- FIBER ROLL
- TEMPORARY HIGH-VISIBILITY FENCE

EROSION CONTROL

ITEM	MATERIAL		APPLICATION RATE
	DESCRIPTION	TYPE	
TEMPORARY HYDROSEED	SEED	SEED MIX	70 LB/ACRE
	FIBER	WOOD	2000 LB/ACRE
	NATURAL SLOW RELEASE FERTILIZER	GRANULAR	800 LB/ACRE
	TACKIFIER	PSYLLIUM	100 LB/ACRE

SEED MIX

BOTANICAL NAME	COMMON NAME	LB PURE LIVE SEED PER ACRE
BROMUS CARINATUS	CALIFORNIA BROME	25
ELYMUS GLAUCUS	BLUE WILDRYE	10
VULPIA MICROSTACHYS	THREE WEEKS FESCUE	6
TRIFOLIUM WILDENOVII	TOMCAT CLOVER	4
HORDEUM BRACHYANTHERUM	CALIFORNIA MEADOW BARLEY	25

DOKKEN ENGINEERING
110 Rue Lane Road, Suite 200
Santa Cruz, CA 95060
Ph 831.457.0962 Fax 831.457.0963

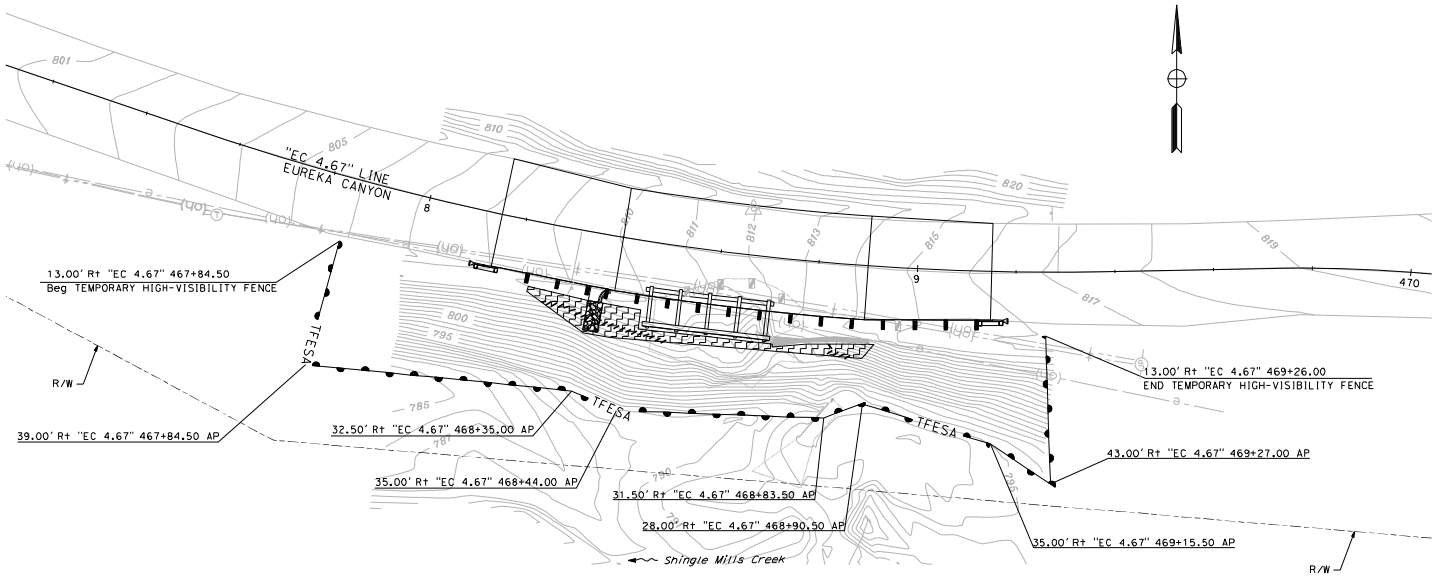

PM 4.67

NOTE:
The Contractor shall verify all controlling field dimensions before ordering or fabricating any material.

EROSION CONTROL PLAN

SCALE 1" = 10'

EC-3

RELATIVE BORDER SCALE IS IN INCHES 0 1 2 3 | #FILEABBREV | SHEET NAME: | DRAWING NAME:

DATE	REVISION	BY

PROJECT ENGINEER: ERIC ESPINOZA

COUNTY OF SANTA CRUZ – DEPARTMENT OF PUBLIC WORKS

EUREKA CANYON – PM 4.67
STORM DAMAGE REPAIR PROJECT

DRAWN: K. MOE
CHECKED: R. GRIGGS
DATE: 2/20/25
SCALE: AS NOTED
JOB NO. P76779

The County or its officers or agents shall not be responsible for the accuracy or completeness of electronic copies of this plan sheet.

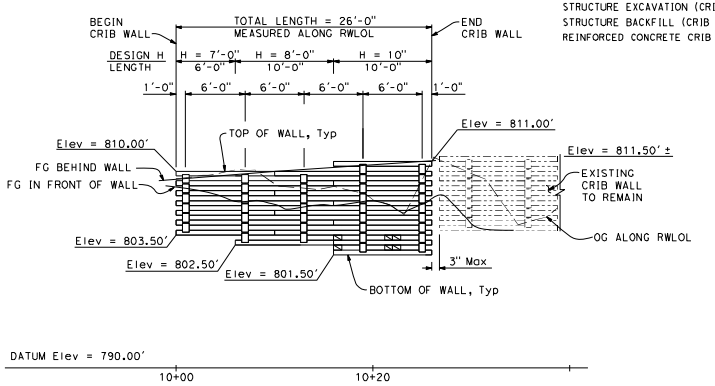

ELEVATION

1" = 5'

QUANTITIES

ITEM	QUANTITY	UNIT
STRUCTURE EXCAVATION (CRIB WALL)	75	CY
STRUCTURE BACKFILL (CRIB WALL)	84	CY
REINFORCED CONCRETE CRIB WALL	209	SQFT

GENERAL NOTES

DESIGN: AASHTO LRFD Bridge Design Specifications, 8th edition with California Amendments, Preface dated November 2019

Standard Plans and Specifications, 2024 edition with Revised Standard Plans, dated Oct 2024.

LIVE LOAD: 240 psf equivalent to 2 feet soil weight

REINFORCED CONCRETE:
fy = 60 ksi
f' = 3.6 ksi
n = 8

SEISMIC PARAMETERS: Seismic Incremental 12H psf uniform pressure, H is the wall height in feet.

SOIL PARAMETERS:
Φ = 34°
δ = 17°
γ = 120 pcf
kh = 0.3
ka = 0.26

Lateral earth pressure determined by Coulomb's theory.

DOKKEN ENGINEERING
110 BLUE RIDGE, SUITE 200
PH: 916-635-9400 FAX: 916-635-9405

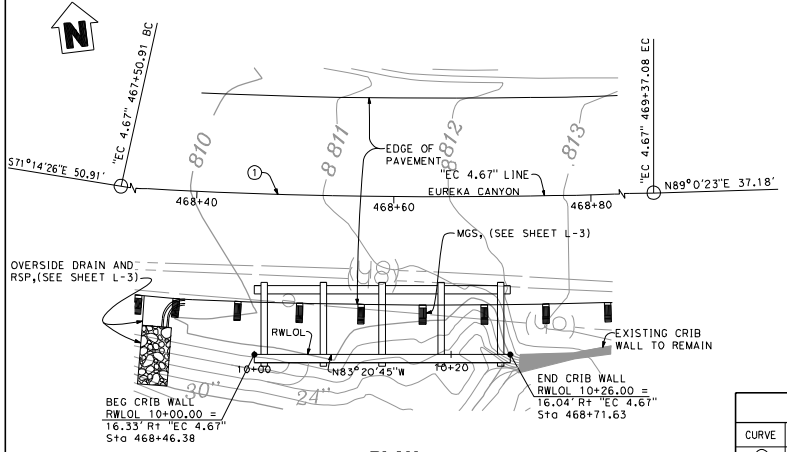

NOTE:
The Contractor shall verify all controlling field dimensions before ordering or fabricating any material.

PLAN

1" = 5'

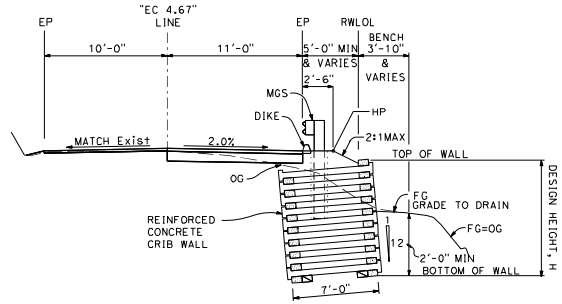

LEGEND:
10" x 6" Stretchers
10" x 6" Filler Blocks

TYPICAL SECTION

¼" = 1'-0"

CURVE DATA

CURVE	RADIUS	DELTA	TANGENT	LENGTH
1	540.00'	19°45'11"	94.02'	186.17'

GENERAL PLAN

S-14

RELATIVE BORDER SCALE IS IN INCHES 0 1 2 3

$FILEABBREV

SHEET NAME:

DRAWING NAME:

BY	REVISION	DATE

PROJECT ENGINEER: ROSA GRIGGS

COUNTY OF SANTA CRUZ – DEPARTMENT OF PUBLIC WORKS

EUREKA CANYON ROAD – PM 4.67
STORM DAMAGE REPAIR PROJECT

DRAWN: N. ORTIGOZA
CHECKED: G. MORALES
DATE: 2/20/2025
SCALE: AS NOTED
JOB NO. P76779

The County or its officers or agents shall not be responsible for the accuracy or completeness of electronic copies of this plan sheet.

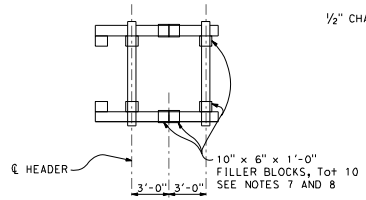

VIEW C-C
NO SCALE

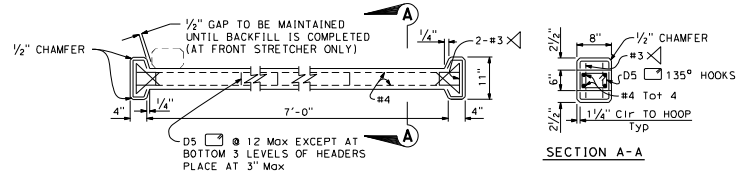

HEADER DETAIL
NO SCALE

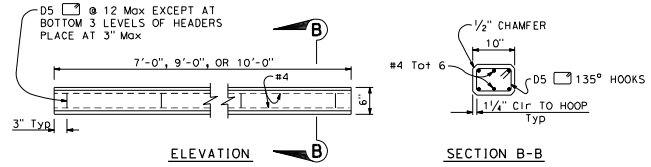

STRETCHER DETAIL
NO SCALE

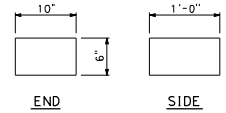

FILLER BLOCK DETAIL
NO SCALE

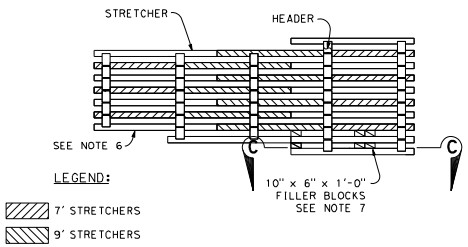

STRETCHER PLACEMENT ELEVATION
NO SCALE

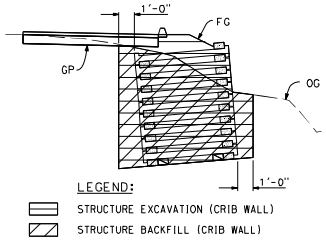

LIMITS OF PAYMENT FOR EXCAVATION AND BACKFILL
NO SCALE

NOTE:
The Contractor shall verify all controlling field dimensions before ordering or fabricating any material.

NOTES:

1. Concrete to concrete bearing surfaces shall be finished to a smooth plane. The gap between bearing surfaces shall not exceed ⅛ inch. Where a gap of 1/16 inch to ⅛ inch exists, a 1/16 inch pad of asphalt felt or sheet neoprene shall be placed between the bearing surfaces.
2. All members may be manufactured to dimensions ⅛ inch greater in thickness and stretchers ½ inch less in length.
3. Where an opening is specified in the face of a wall, special length stretchers and additional headers may be required.
4. For locations where filler blocks are required, special length front face closure members may be required.
5. The thickness of the lowest step for each wall type shall not be less than the dimension shown on these plans.
6. All stretchers are 10'-0" except as noted.
7. Place 2 filler blocks midspan between stretchers in the bottom 2 levels of wall 9' high and higher.
8. Place 2 filler blocks where stretchers and headers intersect in the bottom 2 levels of wall 9' high and higher.

FOUNDATION PRESSURE TABLE

Design Height [ft]	Service Permissible Net Contact Stress (Settlement) (ksf)	Strength Factored Gross Nominal Bearing Resistance φ_b= 0.45 (ksf)	Extreme Event Factored Gross Nominal Bearing Resistance φ_b = 1.00 (ksf)
7, 8, 10	2.1	3.5	5

NOTE:

1. Nominal soil bearing resistance, design lateral loads, settlement and overall slope stability shall be determined by analysis based on a foundation site investigation. Walls shall not be founded on unimproved original ground with nominal bearing resistance less than 6.2 ksf.

CRIB WALL DETAILS
S-15

RELATIVE BORDER SCALE IS IN INCHES 0 1 2 3 | $FILEABBREV | SHEET NAME: | DRAWING NAME:

DOKKEN ENGINEERING
110 BLUE RIDGE, SUITE 200
PH: 916-635-9400 FAX: 916-635-9405

REVISION	DATE	BY

PROJECT ENGINEER
ROSA GRIGGS

COUNTY OF SANTA CRUZ – DEPARTMENT OF PUBLIC WORKS
EUREKA CANYON ROAD – PM 4.67
STORM DAMAGE REPAIR PROJECT

DRAWN: N. ORTIGOZA
CHECKED: G. MORALES
DATE: 2/20/2025
SCALE: AS NOTED
JOB NO. P76779
SHEET 36 OF 51

The County or its officers or agents shall not be responsible for the accuracy or completeness of electronic copies of this plan sheet.

LEGEND:

- (1) CURVE NUMBER
- (#) TRAFFIC LINE DETAIL
- NEW STRUCTURAL SECTION
- LONGITUDINAL CONFORM
- DEBRIS REMOVAL/CLEAN DITCH
- REMOVE TREE

NOTES:

1. PROVIDE SECONDARY CONTAINMENT IN COMBINATION WITH PRIMARY CONTAINMENT IF STAGING AREAS ARE WITHIN 100 FEET FROM A WATERBODY. SECONDARY CONTAINMENT MAY BE IN THE FORM OF A SOIL BERM, PLASTIC COVERED GRAVEL BAGS, OR SIMILAR IMPERVIOUS FEATURE THAT PREVENTS LIQUIDS FROM FLOWING OFF OF THE STAGING AREA.

CURVE DATA

No. (X)	R	Δ	T	L
1	1000.00'	5°6'19"	44.58	89.10
2	210.00'	13°38'31"	25.11	50.00

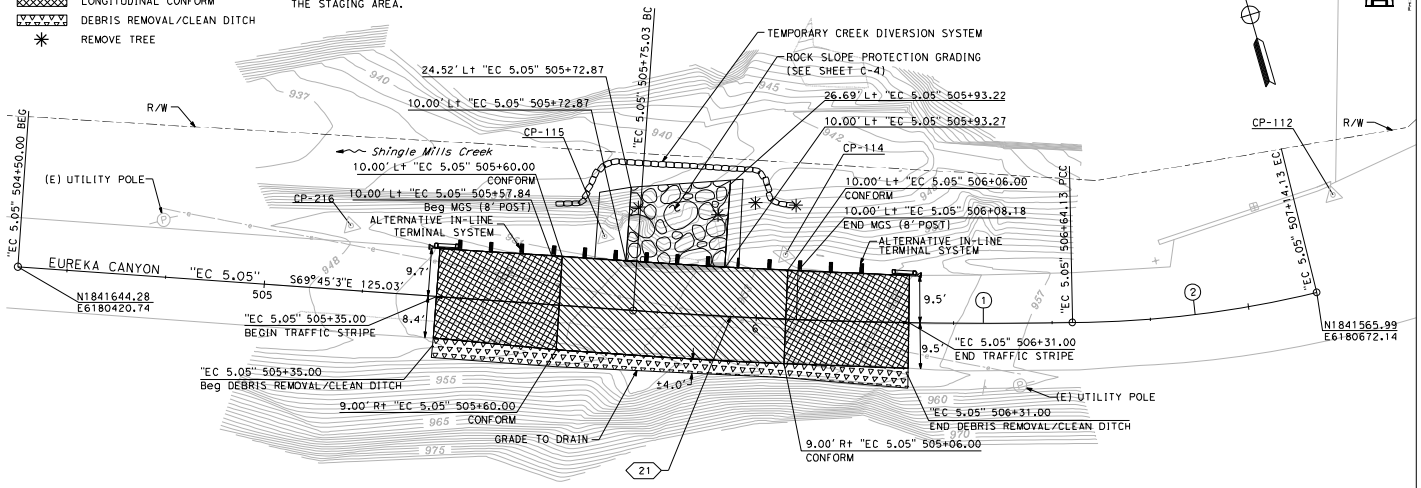

PROJECT CONTROL							
No	NORTHING	EASTING	ELEV	LINE	STATION	OFFSET	DESCRIPTION
112	1841584.10	6180680.85	962.38	-	-	-	600
114	1841603.30	6180570.85	954.19	"EC 5.04"	506+05.42	13.05' Lt	600
115	1841617.06	6180536.68	951.88	"EC 5.04"	505+68.20	14.58' Lt	600
216	1841633.50	6180487.93	948.68	"EC 5.04"	505+16.77	13.13' Lt	MAC

DATUM NOTE
HORIZONTAL DATUM: NAD 83 CALIFORNIA ZONE 3
VERTICAL DATUM: NAVD 88

PM 5.05

NOTE:
The Contractor shall verify all controlling field dimensions before ordering or fabricating any material.

LAYOUT
SCALE 1"=10' **L-4**

RELATIVE BORDER SCALE IS IN INCHES 0 1 2 3 | #FILEABBREV | SHEET NAME: | DRAWING NAME:

DOKKEN ENGINEERING
110 Rue Lione Street, Suite 200
Lafayette, LA 70508
Ph: 337.706.0940 Fax: 337.706.0946

DATE	REVISION	BY

PROJECT ENGINEER
ERIC ESPINOZA

COUNTY OF SANTA CRUZ - DEPARTMENT OF PUBLIC WORKS
EUREKA CANYON – PM 5.05
STORM DAMAGE REPAIR PROJECT

DRAWN: K. MOE
CHECKED: R. GRIGGS
DATE: 2/20/25
SCALE: AS NOTED
JOB NO. P76713
SHEET 37 OF 51

The County or its officers or agents shall not be responsible for the accuracy or completeness of electronic copies of this plan sheet.

LEGEND:

- COLD PLANE ASPHALT CONCRETE PAVEMENT
- ROCK SLOPE PROTECTION
- CLASS 1 AGGREGATE SUBBASE
- DEBRIS REMOVAL/CLEAN DITCH

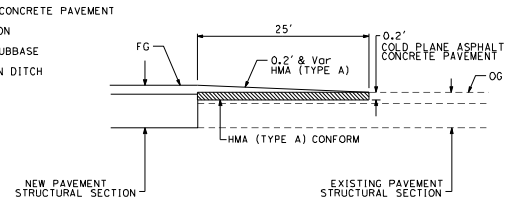

LONGITUDINAL CONFORM DETAIL

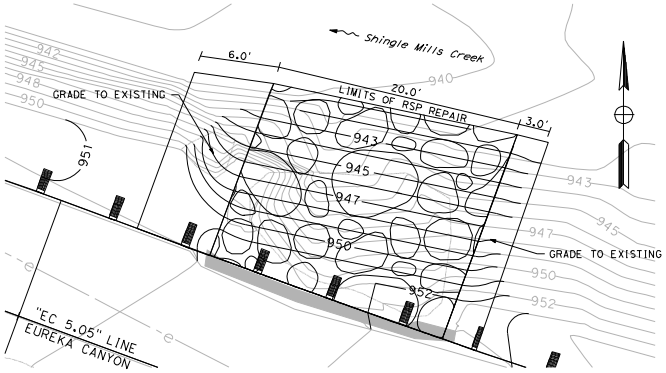

ROCK SLOPE PROTECTION GRADING
SCALE: 1"=8'

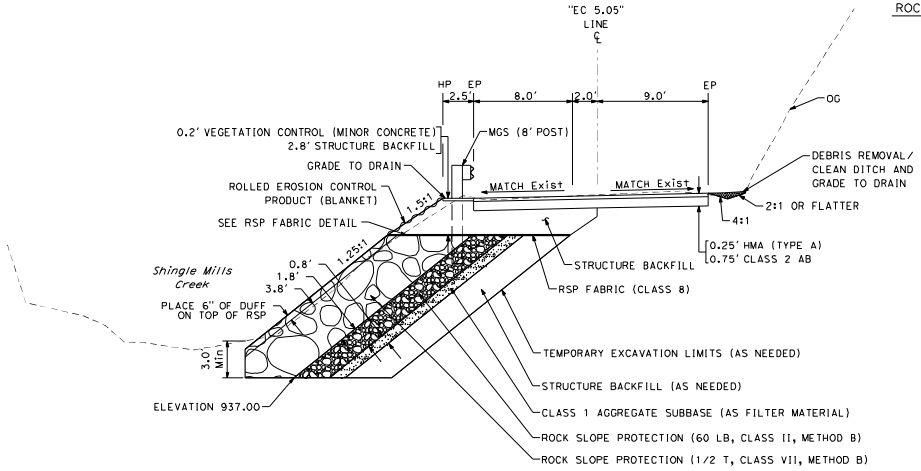

TYPICAL SECTION - PM 5.05

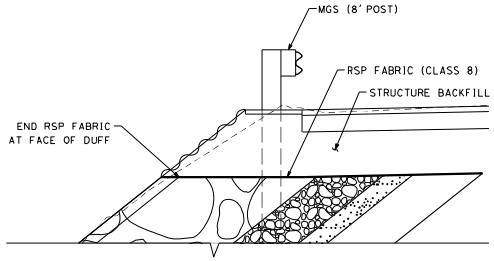

RSP FABRIC DETAIL

NOTE:
The Contractor shall verify all controlling field dimensions before ordering or fabricating any material.

CONSTRUCTION DETAILS

NO SCALE

C-4

RELATIVE BORDER SCALE IS IN INCHES 0 1 2 3 | #FILEABBREV | SHEET NAME: | DRAWING NAME:

DOKKEN ENGINEERING
110 Blue Ridge Road, Suite 200
Santa Cruz, CA 95060
Ph: 831.457.0962 Fax: 831.457.0964

DATE	REVISION	BY

PROJECT ENGINEER: ERIC ESPINOZA

COUNTY OF SANTA CRUZ - DEPARTMENT OF PUBLIC WORKS

EUREKA CANYON - PM 5.05
STORM DAMAGE REPAIR PROJECT

DRAWN: K. MOE
CHECKED: R. GRIGGS
DATE: 2/20/25
SCALE: AS NOTED
JOB NO. P76713

The County or its officers or agents shall not be responsible for the accuracy or completeness of electronic copies of this plan sheet.

LEGEND:

- TEMPORARY HMA (TYPE A) WIDENING
- DIRECTION OF TRAFFIC
- TWO WAY TRAFFIC (ONE LANE)
- CONSTRUCTION AREA SIGN

STAGE 1:

1. UNDER TRAFFIC CONTROL, CONSTRUCT TEMPORARY WIDENING
2. SET UP TRAFFIC HANDLING
3. INSTALL TEMPORARY CREEK DIVERSION SYSTEM
4. RECONSTRUCT SLOPE
5. CONSTRUCT ROADWAY STRUCTURAL SECTION

DOKKEN ENGINEERING
110 Rue Lucine Road, Suite 200
Santa Cruz, CA 95060
Ph: 831-457-0962 Fax: 831-457-0963

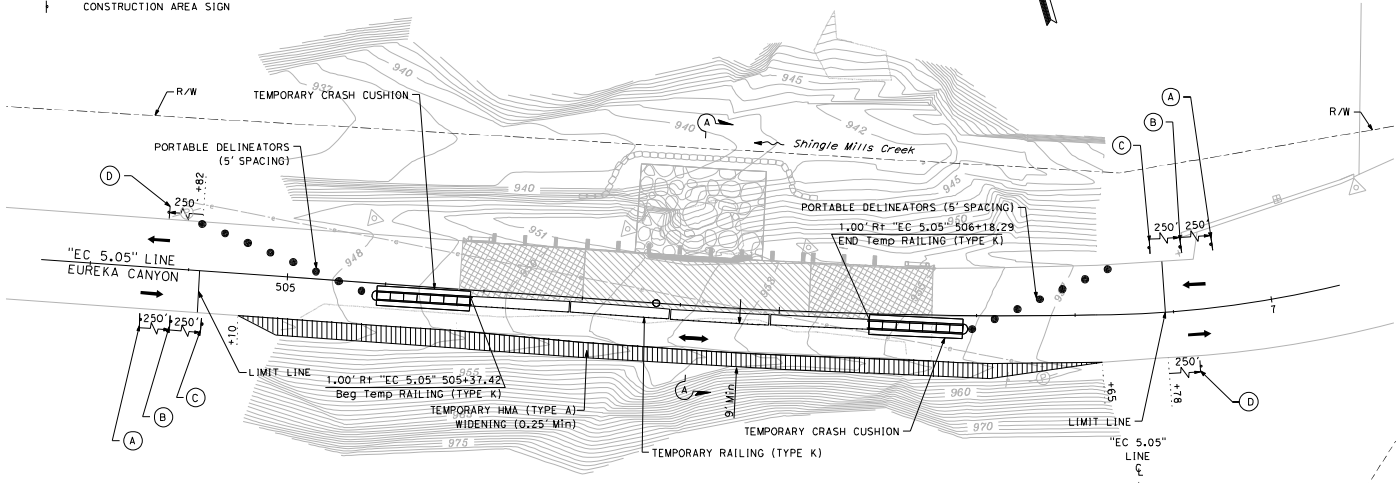

PM 5.05
STAGE 1

CONSTRUCTION AREA SIGNS QUANTITY TABLE

SIGN	SIGN CODE	PANEL SIZE	MESSAGE	No. AND SIZE OF POSTS	(N) No. OF SIGNS
A	W20-1	36" X 36"	ROAD WORK AHEAD	1 - 4" x 6"	2
B	W20-4	36" X 36"	ONE LANE ROAD AHEAD	1 - 4" x 6"	2
C	R1-1	36" X 36"	STOP	1 - 4" x 6"	2
D	G20-2	36" X 18"	END ROAD WORK	1 - 4" x 6"	2

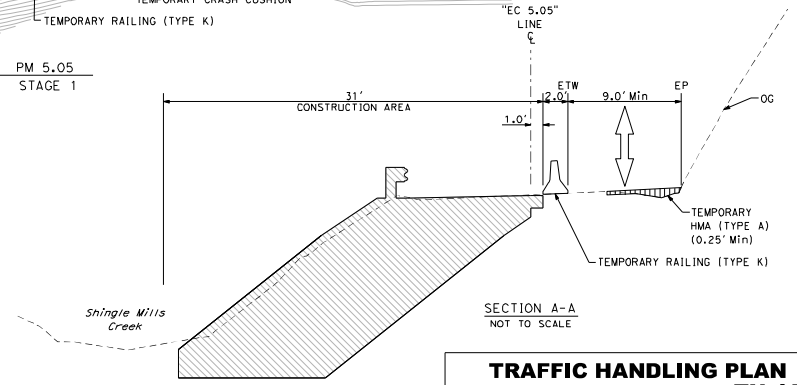

SECTION A-A
NOT TO SCALE

NOTE:
The Contractor shall verify all controlling field dimensions before ordering or fabricating any material.

TRAFFIC HANDLING PLAN
SCALE 1"=10'
TH-4A

RELATIVE BORDER SCALE IS IN INCHES 0 1 2 3 | #FILEABBREV | SHEET NAME: | DRAWING NAME:

DATE	REVISION	BY

PROJECT ENGINEER
ERIC ESPINOZA

COUNTY OF SANTA CRUZ - DEPARTMENT OF PUBLIC WORKS
EUREKA CANYON - PM 5.05
STORM DAMAGE REPAIR PROJECT

DRAWN: K. MOE
CHECKED: R. GRIGOS
DATE: 2/20/25
SCALE: AS NOTED
JOB NO. P76713
SHEET
39 OF 51

The County or its officers or agents shall not be responsible for the accuracy or completeness of electronic copies of this plan sheet.

LEGEND:

- DIRECTION OF TRAFFIC
- TWO WAY TRAFFIC (ONE LANE)
- CONSTRUCTION AREA SIGN

STAGE 2:

1. SHIFT TRAFFIC HANDLING
2. REMOVE TEMPORARY HMA (TYPE A) WIDENING
3. CONSTRUCT ROADWAY STRUCTURAL SECTION
4. UNDER TRAFFIC CONTROL, REMOVE TRAFFIC HANDLING AND COMPLETE STRIPING

DOKKEN ENGINEERING
110 Blue Ridge, Suite 200
Santa Cruz, CA 95060
Ph: 831-457-0962 Fax: 831-457-0963

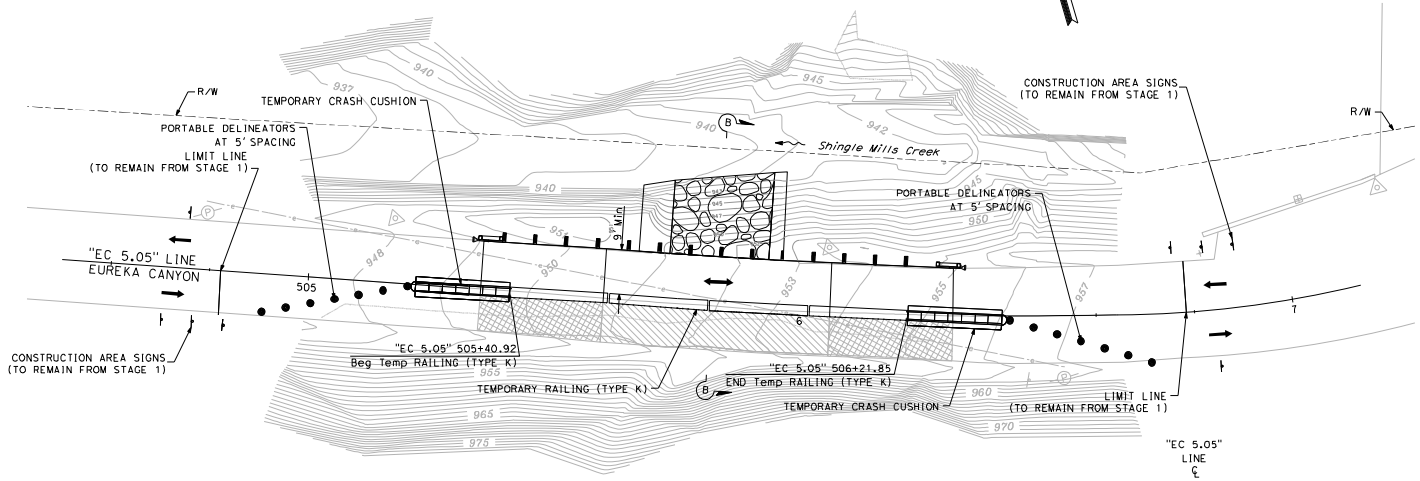

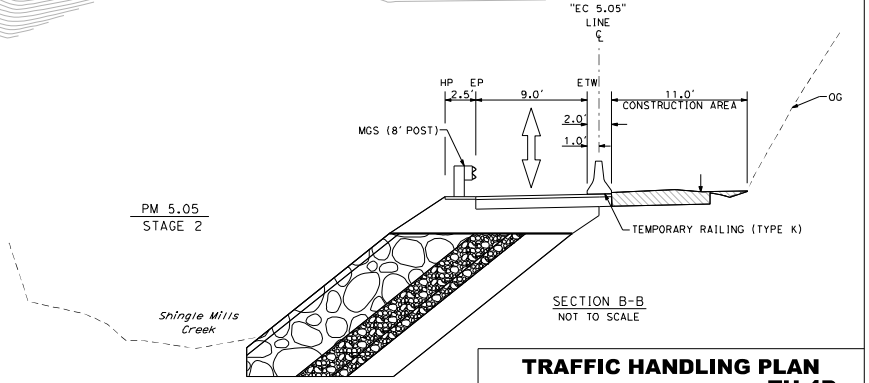

PM 5.05
STAGE 2

SECTION B-B
NOT TO SCALE

NOTE:
The Contractor shall verify all controlling field dimensions before ordering or fabricating any material.

TRAFFIC HANDLING PLAN
SCALE 1"=10'

TH-4B

RELATIVE BORDER SCALE IS IN INCHES 0 1 2 3 | $FILEABBREV | SHEET NAME: | DRAWING NAME:

DATE	REVISION	BY

PROJECT ENGINEER
ERIC ESPINOZA

COUNTY OF SANTA CRUZ – DEPARTMENT OF PUBLIC WORKS
EUREKA CANYON – PM 5.05
STORM DAMAGE REPAIR PROJECT

DRAWN: K. MOE
CHECKED: R. GRIGGS
DATE: 2/20/25
SCALE: AS NOTED
JOB NO. P76713

The County or its officers or agents
shall not be responsible for the accuracy or
completeness of electronic copies of this plan sheet.

ROADWAY ITEMS - PM 5.05

ITEM	CLASS 2 AGGREGATE BASE	CLASS 1 AGGREGATE SUBBASE	HOT MIX ASPHALT (TYPE A)	COLD PLANE ASPHALT CONCRETE PAVEMENT	ROADWAY EXCAVATION	ALTERNATIVE IN-LINE TERMINAL SYSTEM	VEGETATION CONTROL (MINOR CONCRETE)	MIDWEST GUARDRAIL SYSTEM (8' POST)	6" THERMOPLASTIC TRAFFIC STRIPE	ROCK SLOPE PROTECTION (60 LB, CLASS II, METHOD B)	ROCK SLOPE PROTECTION (1/2 T, CLASS II, METHOD B)	ROCK SLOPE PROTECTION FABRIC (CLASS 8)	STRUCTURE BACKFILL	DEBRIS REMOVAL/CLEAN DITCH	FIBER ROLLS	HYDROSEED	ROLLED EROSION CONTROL PRODUCT (BLANKET)	DUFF	TEMPORARY HYDROSEED	TEMPORARY HIGH-VISIBILTY FENCE	REMOVE TREE
	CY	CY	TON	SQYD	CY	EA	SQYD	LF	LF	CY	CY	SQYD	CY	SQYD	LF	SQFT	SQFT	SQFT	SQYD	LF	EA
"EC 5.05"	33	25	40	104	53	2	7	50	192	26	58	33	61	36	171	566	100	675	48	135	4

TRAFFIC HANDLING ITEMS - PM 5.05

ITEM	CONSTRUCTION STAGE	TEMPORARY CRASH CUSHION	TEMPORARY RAILING (TYPE K)	PORTABLE DELINEATOR	TEMP PAVEMENT MARKING (PAINT)	HOT MIX ASPHALT (TYPE A)
		EA	LF	EA	SQFT	TON
"EC 5.05"	1	2	80	15	20	10
	2	2	80	14		-

NOTE:
The Contractor shall verify all controlling field dimensions before ordering or fabricating any material.

SUMMARY OF QUANTITIES

NO SCALE

Q-4

RELATIVE BORDER SCALE IS IN INCHES 0 1 2 3

$FILEABBREV

SHEET NAME:

DRAWING NAME:

DOKKEN ENGINEERING
110 Rue Lione Street, Suite 200
Lafayette, LA 70508
Ph: 337.262.2022 Fax: 337.262.2042

DATE	REVISION	BY

PROJECT ENGINEER
ERIC ESPINOZA

COUNTY OF SANTA CRUZ - DEPARTMENT OF PUBLIC WORKS

EUREKA CANYON - PM 5.05
STORM DAMAGE REPAIR PROJECT

DRAWN: K. MOE
CHECKED: R. GRIGGS
DATE: 2/20/25
SCALE: AS NOTED
JOB NO. P76713

The County or its officers or agents shall not be responsible for the accuracy or completeness of electronic copies of this plan sheet.

LEGEND:

- REDWOOD RIPARIAN HYDROSEED MIX
- RIPARIAN FERN PLANTINGS - SEE TABLE
- DUFF
- BIGLEAF MAPLE (3 TOTAL)
- COAST REDWOOD (3 TOTAL)

REDWOOD RIPARIAN HYDROSEED MIX

Common Name	% PURITY	% GERM	LBS
Grasses/Grass-like Herbs			
Bentgrass (*Agrostis exrata*)	90	85	0.11
California Hairgrass (*Deschampsia cespitosa ssp. holciformis*)	90	80	0.20
Slender Hairgrass (*Deschampsia elongata*)	80	60	0.41
Meadow Barley (*Hordeum brachyantherum*)	90	70	3.65
Shrubs			
California Rose (*Rosa californica*)	90	60	16.23
Herbs			
Sky Lupine (*Lipinus nanus*)	95	70	3.61
Stinging Nettie (*Urtica dioica holosericea*)	50	60	0.12
		Total	24.30

RIPARIAN PLANTINGS

Scientific Name	Common Name	SIZE	Quantity	Spacing
Trees				
Acer macrophyllum	Bigleaf Maple	One Gallon	3	SEE PLAN
Sequoia sempervirens	Coast Redwood	One Gallon	3	SEE PLAN
Vasculars				
Carex angustata	Common Ladyfern	Container	3	4 FT
Adiantum pedatum l.	Five Finger Maidenhair	Container	3	4 FT
Polystichum munitum	Western Sword Fern	Container	3	4 FT

DOKKEN ENGINEERING
110 Blue Ridge Road, Suite 200
Santa Cruz, CA 95060
Ph: 831.457.0842 Fax: 831.457.0843

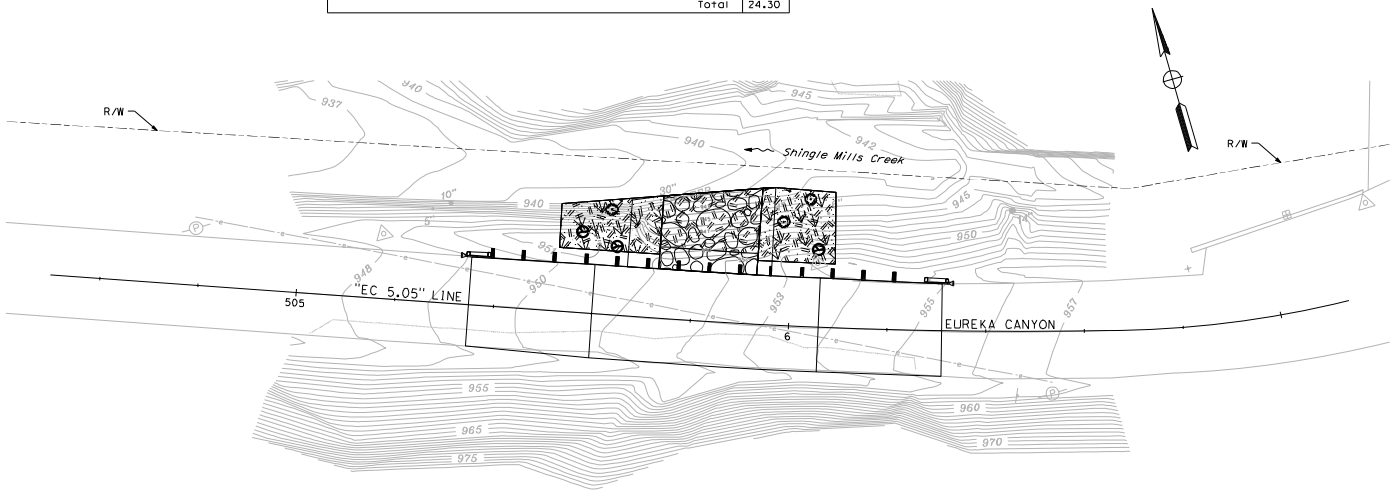

NOTES:

1. PLANTINGS WITHIN 10 FEET OF ROADWAY SHALL BE CAGED.

NOTE:
The Contractor shall verify all controlling field dimensions before ordering or fabricating any material.

PLANTING PLAN

SCALE 1" = 10'

PP-4

RELATIVE BORDER SCALE IS IN INCHES 0 1 2 3

#FILEABBREV

SHEET NAME:

DRAWING NAME:

DATE	REVISION	BY

PROJECT ENGINEER
ERIC ESPINOZA

COUNTY OF SANTA CRUZ - DEPARTMENT OF PUBLIC WORKS

EUREKA CANYON - PM 5.05
STORM DAMAGE REPAIR PROJECT

DRAWN: K. MOE
CHECKED: R. GRIGGS
DATE: 2/20/25
SCALE: AS NOTED
JOB NO. P76713

The County or its officers or agents shall not be responsible for the accuracy or completeness of electronic copies of this plan sheet.

LEGEND:

- TEMPORARY HYDROSEED
- FIBER ROLL
- TEMPORARY HIGH-VISIBILITY FENCE

EROSION CONTROL

ITEM	MATERIAL		APPLICATION RATE
	DESCRIPTION	TYPE	
TEMPORARY HYDROSEED	SEED	SEED MIX	70 LB/ACRE
	FIBER	WOOD	2000 LB/ACRE
	NATURAL SLOW RELEASE FERTILIZER	GRANULAR	800 LB/ACRE
	TACKIFIER	PSYLLIUM	100 LB/ACRE

SEED MIX

BOTANICAL NAME	COMMON NAME	LB PURE LIVE SEED PER ACRE
BROMUS CARINATUS	CALIFORNIA BROME	25
ELYMUS GLAUCUS	BLUE WILDRYE	10
VULPIA MICROSTACHYS	THREE WEEKS FESCUE	6
TRIFOLIUM WILDENOVII	TOMCAT CLOVER	4
HORDEUM BRACHYANTHERUM	CALIFORNIA MEADOW BARLEY	25

DOKKEN ENGINEERING
1104 E. CLIVE, FRESNO, CA 93307
PH: 559.485.8832 FAX: 559.485.8833

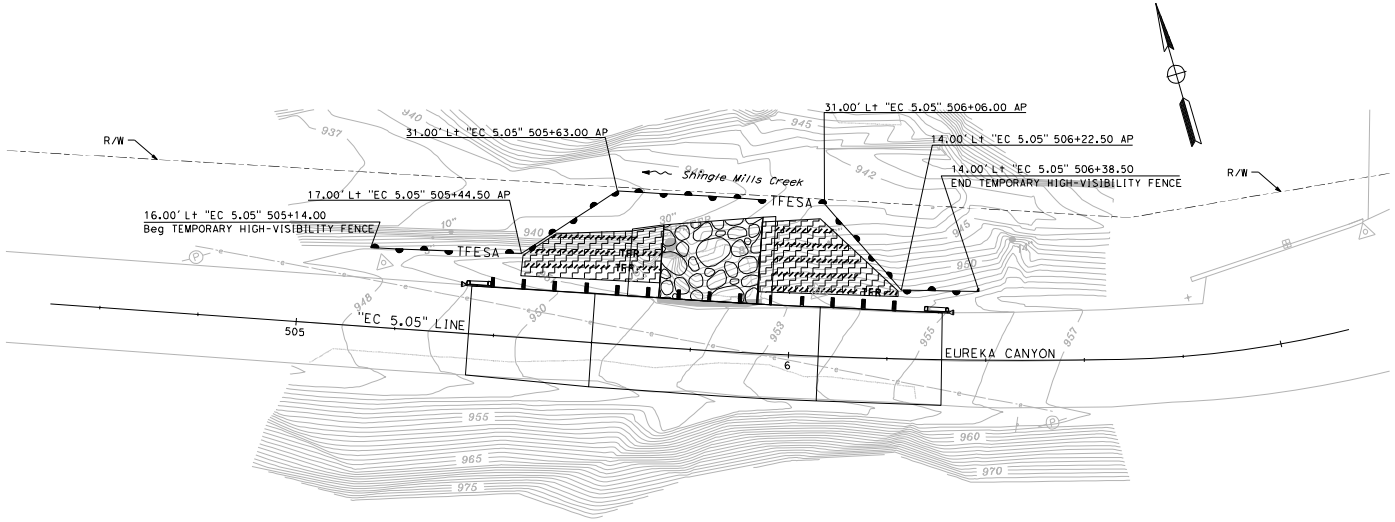

NOTE:
The Contractor shall verify all controlling field dimensions before ordering or fabricating any material.

EROSION CONTROL PLAN

SCALE 1" = 10'

EC-4

RELATIVE BORDER SCALE IS IN INCHES 0 1 2 3

$FILEABBREV

SHEET NAME:

DRAWING NAME:

DATE	REVISION	BY

PROJECT ENGINEER
ERIC ESPINOZA

COUNTY OF SANTA CRUZ – DEPARTMENT OF PUBLIC WORKS

EUREKA CANYON – PM 5.05
STORM DAMAGE REPAIR PROJECT

DRAWN: K. MOE
CHECKED: R. GRIGGS
DATE: 2/20/25
SCALE: AS NOTED
JOB NO. P76713

The County or its officers or agents shall not be responsible for the accuracy or completeness of electronic copies of this plan sheet.

LEGEND:

- (1) CURVE NUMBER
- (#) TRAFFIC LINE DETAIL
- NEW STRUCTURAL SECTION
- LONGITUDINAL CONFORM
- DEBRIS REMOVAL/CLEAN DITCH
- TREE TO REMAIN IN PLACE
- REMOVE CREEK DEBRIS - REMOVE FALLEN TREES AND CONCRETE DEBRIS

NOTES:

1. PROVIDE SECONDARY CONTAINMENT IN COMBINATION WITH PRIMARY CONTAINMENT IF STAGING AREAS ARE WITHIN 100 FEET FROM A WATERBODY. SECONDARY CONTAINMENT MAY BE IN THE FORM OF A SOIL BERM, PLASTIC COVERED GRAVEL BAGS, OR SIMILAR IMPERVIOUS FEATURE THAT PREVENTS LIQUIDS FROM FLOWING OFF OF THE STAGING AREA.

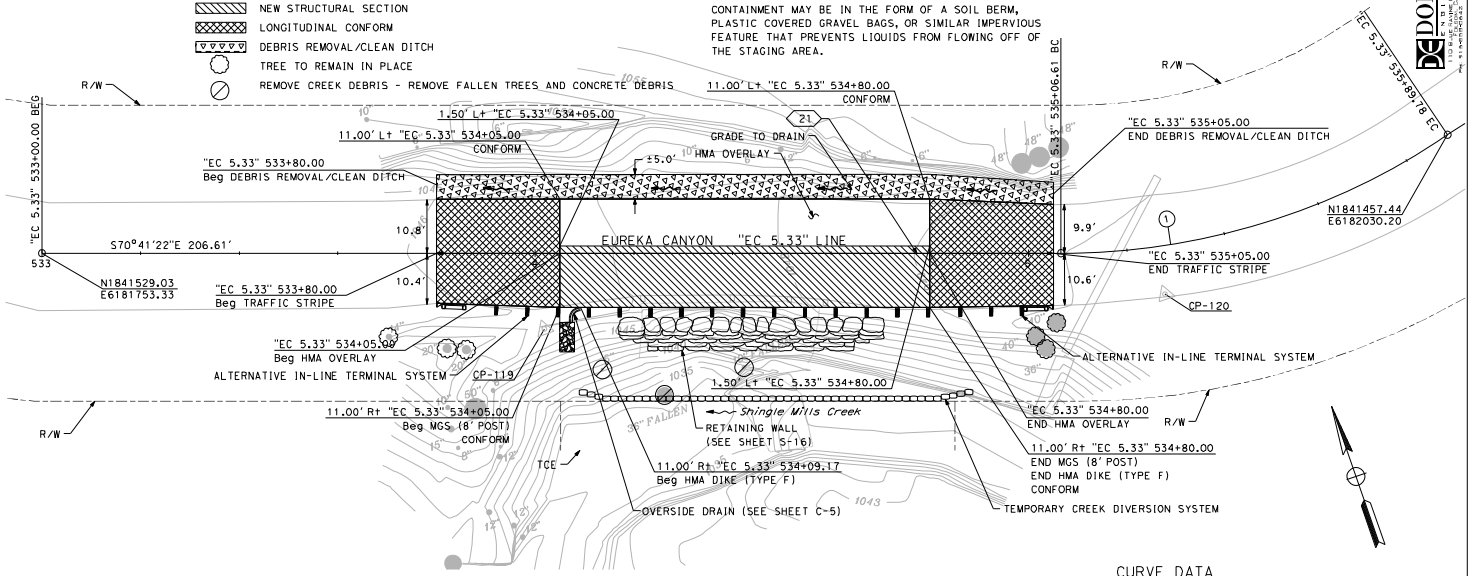

CURVE DATA

No. (X)	R	Δ	T	L
1	140.00'	34°2'22"	42.86'	83.17'

PROJECT CONTROL							
No	NORTHING	EASTING	ELEV	LINE	STATION	OFFSET	DESCRIPTION
118	1841657.34	6181577.75	1031.58	-	-	-	GOD
119	1841480.88	6181844.37	1046.80	-	-	-	GOD
120	1841445.94	6181965.47	1050.73	"EC 5.33"	535+26.33	9.76' Rt	PK

DATUM NOTE
HORIZONTAL DATUM: NAD 83 CALIFORNIA ZONE 3
VERTICAL DATUM: NAVD 88

PM 5.33

NOTE:
The Contractor shall verify all controlling field dimensions before ordering or fabricating any material.

LAYOUT

SCALE 1" = 10'

L-5

RELATIVE BORDER SCALE IS IN INCHES 0 1 2 3

$FILEABBREV

SHEET NAME:

DRAWING NAME:

DOKKEN ENGINEERING
110 Rue Lione Street, Suite 200
Lafayette, LA 70508
Ph: 337.261.2022 Fax: 337.261.2033

DATE	REVISION	BY

PROJECT ENGINEER
ERIC ESPINOZA

COUNTY OF SANTA CRUZ - DEPARTMENT OF PUBLIC WORKS

EUREKA CANYON - PM 5.33
STORM DAMAGE REPAIR PROJECT

DRAWN: K. MOE
CHECKED: R. GRIGGS
DATE: 2/20/25
SCALE: AS NOTED
JOB NO. P76732

The County or its officers or agents shall not be responsible for the accuracy or completeness of electronic copies of this plan sheet.

LEGEND:

COLD PLANE ASPHALT CONCRETE PAVEMENT

DEBRIS REMOVAL/CLEAN DITCH

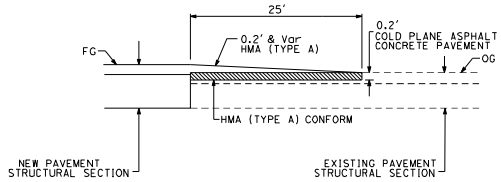

LONGITUDINAL CONFORM DETAIL

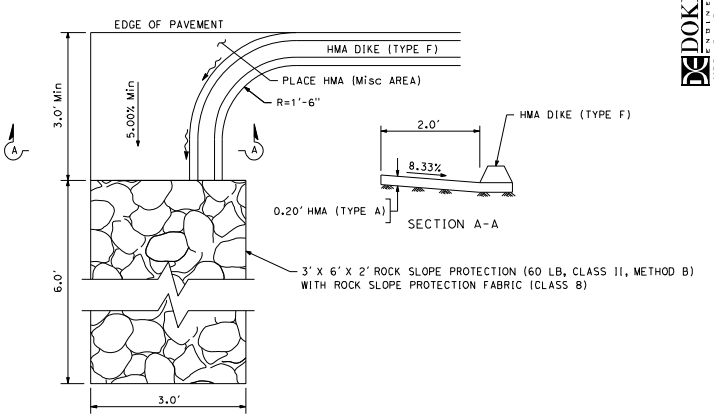

OVERSIDE DRAIN DETAIL

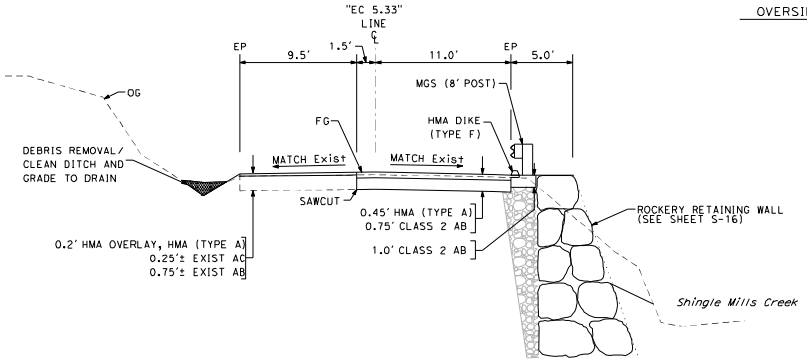

TYPICAL SECTION - PM 5.33

NOTE:
The Contractor shall verify all controlling field dimensions before ordering or fabricating any material.

CONSTRUCTION DETAILS

NO SCALE **C-5**

RELATIVE BORDER SCALE IS IN INCHES 0 1 2 3 | $FILEABBREV | SHEET NAME: | DRAWING NAME:

DOKKEN ENGINEERING
110 Rue Lione Road, Suite 200
Santa Cruz, CA 95060
Ph: 831.426.9560 Fax: 831.426.9561

DATE	REVISION	BY

PROJECT ENGINEER: ERIC ESPINOZA

COUNTY OF SANTA CRUZ - DEPARTMENT OF PUBLIC WORKS

EUREKA CANYON - PM 5.33
STORM DAMAGE REPAIR PROJECT

DRAWN: K. MOE
CHECKED: R. GRIGGS
DATE: 2/20/25
SCALE: AS NOTED
JOB NO. P76732

The County or its officers or agents shall not be responsible for the accuracy or completeness of electronic copies of this plan sheet.

LEGEND:

- TEMPORARY HMA (TYPE A) WIDENING
- DIRECTION OF TRAFFIC
- TWO WAY TRAFFIC (ONE LANE)
- CONSTRUCTION AREA SIGN

NOTES:

1. PORTABLE CHANGEABLE MESSAGE SIGN TO REMAIN DURING ACTIVE CONSTRUCTION FOR ALL SITES.

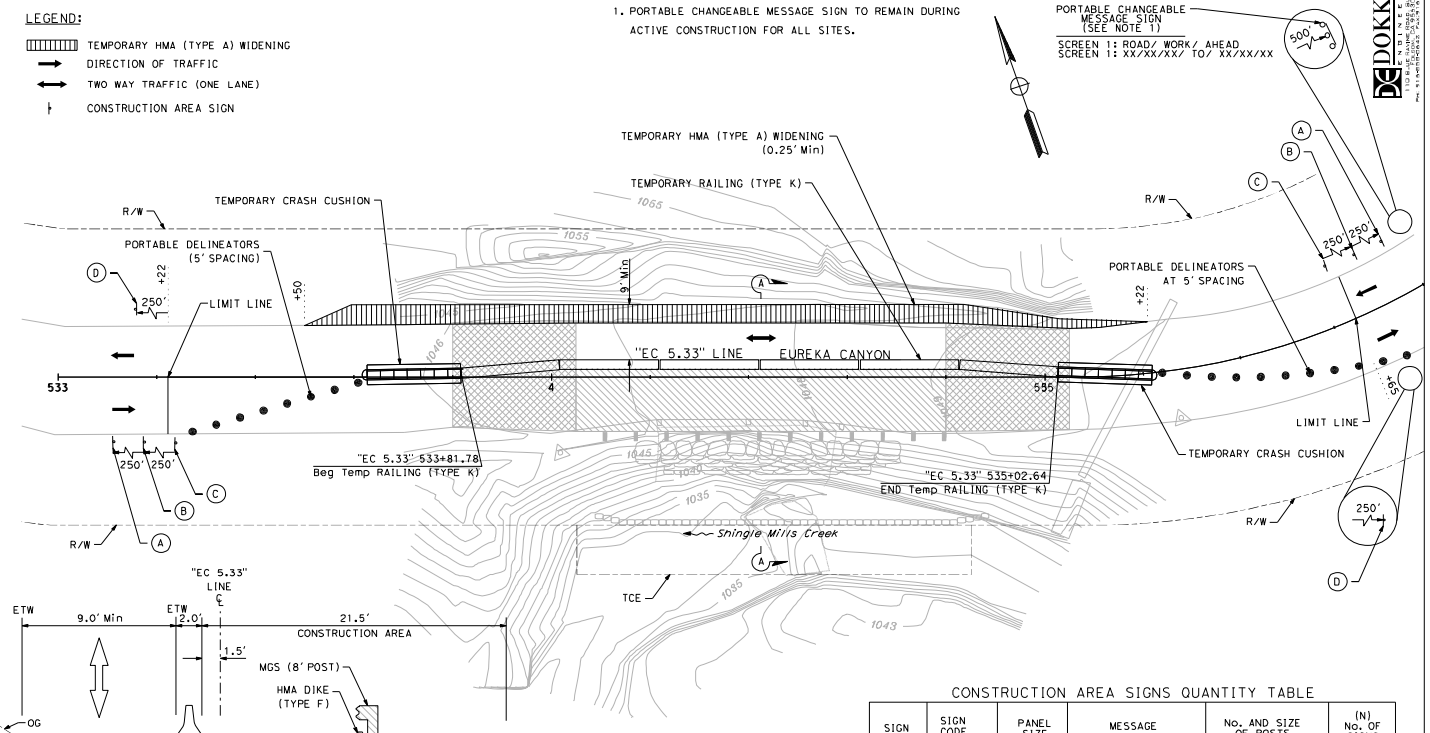

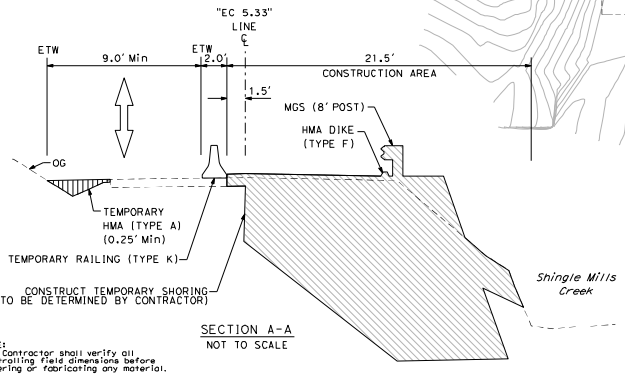

SECTION A-A
NOT TO SCALE

NOTE:
The Contractor shall verify all controlling field dimensions before ordering or fabricating any material.

PM 5.33

CONSTRUCTION AREA SIGNS QUANTITY TABLE

SIGN	SIGN CODE	PANEL SIZE	MESSAGE	No. AND SIZE OF POSTS	(N) No. OF SIGNS
A	W20-1	36" X 36"	ROAD WORK AHEAD	1 - 4" x 6"	2
B	W20-4	36" X 36"	ONE LANE ROAD AHEAD	1 - 4" x 6"	2
C	R1-1	30" X 30"	STOP	1 - 4" x 6"	2
D	G20-2	36" X 18"	END ROAD WORK	1 - 4" x 6"	2

TRAFFIC HANDLING PLAN
SCALE 1"=10'
TH-5

RELATIVE BORDER SCALE IS IN INCHES 0 1 2 3 | $FILEABBREV | SHEET NAME: | DRAWING NAME:

DOKKEN ENGINEERING
110 Blue Ridge Street, Suite 200
Santa Cruz, CA 95060
Ph: 831-457-0962 Fax: 831-457-0963

DATE	REVISION	BY

PROJECT ENGINEER
ERIC ESPINOZA

COUNTY OF SANTA CRUZ - DEPARTMENT OF PUBLIC WORKS
EUREKA CANYON - PM 5.33
STORM DAMAGE REPAIR PROJECT

DRAWN: K. MOE
CHECKED: R. GRIGGS
DATE: 2/20/25
SCALE: AS NOTED
JOB NO. P76732

The County or its officers or agents
shall not be responsible for the accuracy or
completeness of electronic copies of this plan sheet.

ROADWAY ITEMS - PM 5.33

ITEM	CLASS 2 AGGREGATE BASE	HOT MIX ASPHALT (TYPE A)	PLACE HOT MIX ASPHALT (MISCELLANEOUS AREA)	COLD PLANE ASPHALT CONCRETE PAVEMENT	ROADWAY EXCAVATION	ALTERNATIVE IN-LINE TERMINAL SYSTEM	MIDWEST GUARDRAIL SYSTEM (8' POST)	PLACE HMA DIKE (TYPE F)	6" TERMOPLASTIC TRAFFIC STRIPE	ROCK SLOPE PROTECTION (60 LB, CLASS II, METHOD B)	ROCK SLOPE PROTECTION FABRIC (CLASS B)	DEBRIS REMOVAL/CLEAN DITCH	FIBER ROLLS	HYDROSEED	DUFF	TEMPORARY HYDROSEED	TEMPORARY HIGH-VISIBILTY FENCE	REMOVE TREE
	CY	TON	SQYD	SQYD	CY	EA	LF	LF	LF	CY	SQYD	SQYD	LF	SQFT	SQFT	SQYD	LF	EA
"EC 5.33"	30	60	1	119	56	2	75	75	250	2	6	69	86	2641	2641	51	223	3

TRAFFIC CONTROL ITEMS - PM 5.33

ITEM	TEMPORARY CRASH CUSHION	TEMPORARY RAILING (TYPE K)	PORTABLE DELINEATORS	TEMPORARY PAVEMENT MARKING (PAINT)	HOT MIX ASPHALT (TYPE A)	PORTABLE CHANGEABLE MESSAGE SIGN
	EA	LF	EA	SQFT	TON	EA
"EC 5.33"	2	120	19	21	10	1

NOTE:
The Contractor shall verify all
controlling field dimensions before
ordering or fabricating any material.

SUMMARY OF QUANTITIES

NO SCALE

Q-5

RELATIVE BORDER SCALE IS IN INCHES 0 1 2 3

$FILEABBREV

SHEET NAME:

DRAWING NAME:

DOKKEN ENGINEERING
110 Rue Cuyler, Suite 200
Santa Cruz, CA 95060
Ph: 831.457.0962 Fax: 831.457.0964

DATE	REVISION	BY

PROJECT ENGINEER
ERIC ESPINOZA

COUNTY OF SANTA CRUZ - DEPARTMENT OF PUBLIC WORKS

EUREKA CANYON – PM 5.33
STORM DAMAGE REPAIR PROJECT

DRAWN: K. MOE
CHECKED: R. GRIGGS
DATE: 2/20/25
SCALE: AS NOTED
JOB NO. P76732

The County or its officers or agents shall not be responsible for the accuracy or completeness of electronic copies of this plan sheet.

LEGEND:

- REDWOOD RIPARIAN HYDROSEED MIX
- RIPARIAN FERN PLANTINGS - SEE TABLE
- BIGLEAF MAPLE (6 TOTAL)
- COAST REDWOOD (4 TOTAL)

RIPARIAN PLANTINGS

Scientific Name	Common Name	SIZE	Quantity	Spacing
Trees				
Acer macrophyllum	Bigleaf Maple	One Gallon	6	SEE PLAN
Sequoia sempervirens	Coast Redwood	One Gallon	4	SEE PLAN
Vasculars				
Carex angustata	Common Ladyfern	Container	17	4 FT
Adiantum pedatum l.	Five Finger Maidenhair	Container	17	4 FT
Polystichum munitum	Western Sword Fern	Container	17	4 FT

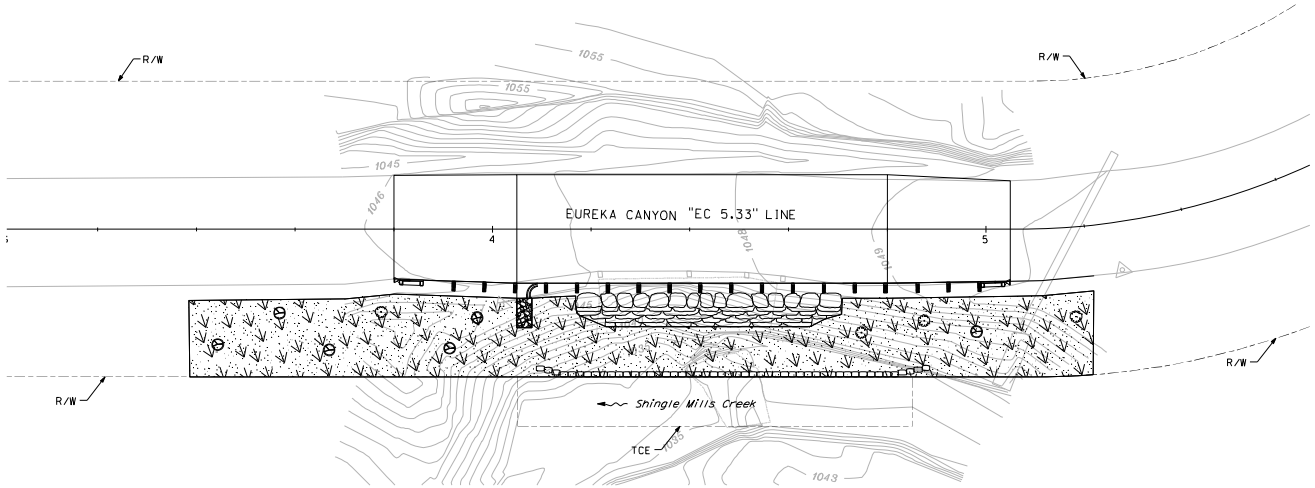

REDWOOD RIPARIAN HYDROSEED MIX

Common Name	% PURITY	% GERM	LBS
Grasses/Grass-like Herbs			
Bentgrass (*Agrostis exrrata*)	90	85	0.11
California Hairgrass (*Deschampsia cespitosa ssp. holciformis*)	90	80	0.20
Slender Hairgrass (*Deschampsia elongata*)	80	60	0.41
Meadow Barley (*Hordeum brachyantherum*)	90	70	3.65
Shrubs			
California Rose (*Rosa californica*)	90	60	16.23
Herbs			
Sky Lupine (*Lipinus nanus*)	95	70	3.61
Stinging Nettle (*Urtica dioica holosericea*)	50	60	0.12
		Total	24.30

NOTES:

1. PLANTINGS WITHIN 10 FEET OF ROADWAY SHALL BE CAGED.

PM 5.33

NOTE:
The Contractor shall verify all controlling field dimensions before ordering or fabricating any material.

PLANTING PLAN

SCALE 1" = 10'

PP-5

RELATIVE BORDER SCALE IS IN INCHES 0 1 2 3

$FILEABBREV

SHEET NAME:

DRAWING NAME:

DOKKEN ENGINEERING
110 Rue Lupine, Suite 200
Santa Cruz, CA 95060
Ph: 831-457-0962 Fax: 831-457-0963

DATE	REVISION	BY

PROJECT ENGINEER: ERIC ESPINOZA

COUNTY OF SANTA CRUZ - DEPARTMENT OF PUBLIC WORKS

EUREKA CANYON – PM 5.33
STORM DAMAGE REPAIR PROJECT

DRAWN: K. MOE
CHECKED: R. GRIGOS
DATE: 2/20/25
SCALE: AS NOTED
JOB NO. P76732

The County or its officers or agents shall not be responsible for the accuracy or completeness of electronic copies of this plan sheet.

LEGEND:

TEMPORARY HYDROSEED

FIBER ROLL

TEMPORARY HIGH-VISIBILTY FENCE

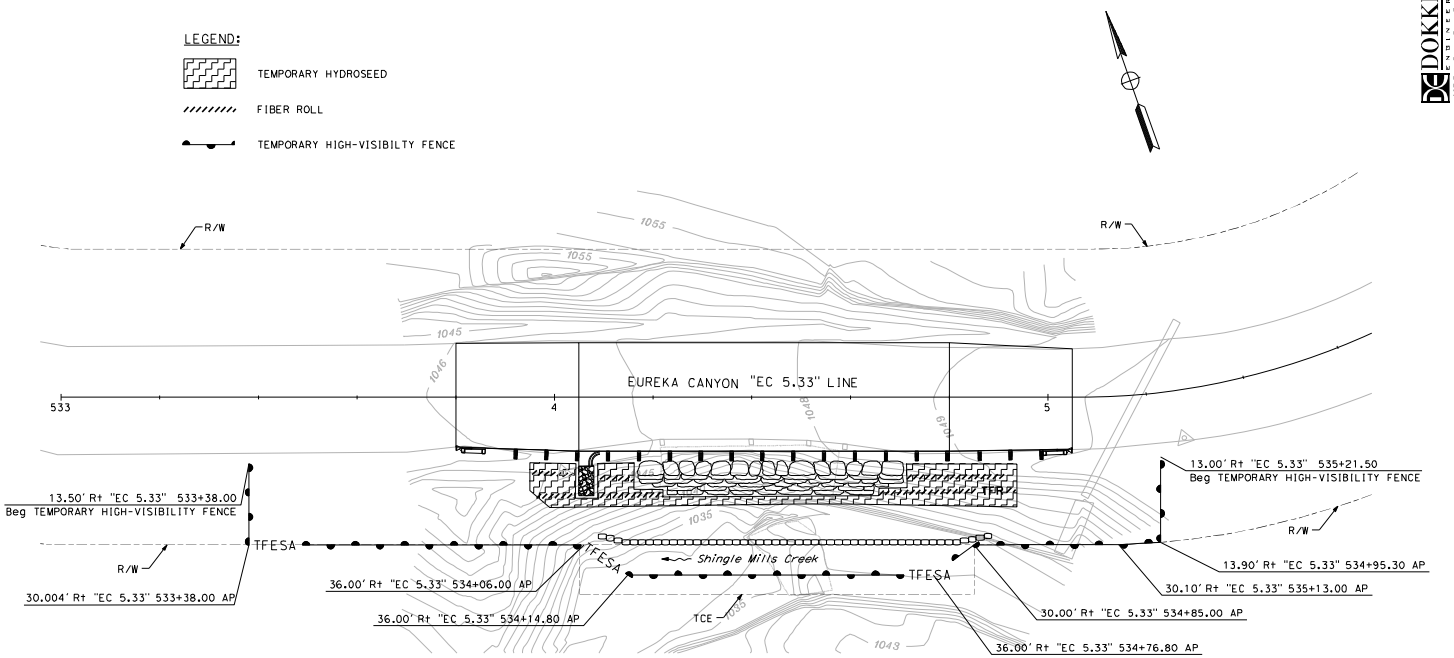

EROSION CONTROL

ITEM	MATERIAL		APPLICATION RATE
	DESCRIPTION	TYPE	
TEMPORARY HYDROSEED	SEED	SEED MIX	70 LB/ACRE
	FIBER	WOOD	2000 LB/ACRE
	NATURAL SLOW RELEASE FERTILIZER	GRANULAR	800 LB/ACRE
	TACKIFIER	PSYLLIUM	100 LB/ACRE

SEED MIX

BOTANICAL NAME	COMMON NAME	LB PURE LIVE SEED PER ACRE
BROMUS CARINATUS	CALIFORNIA BROME	25
ELYMUS GLAUCUS	BLUE WILDRYE	10
VULPIA MICROSTACHYS	THREE WEEKS FESCUE	6
TRIFOLIUM WILDENOVII	TOMCAT CLOVER	4
HORDEUM BRACHYANTHERUM	CALIFORNIA MEADOW BARLEY	25

PM 5.33

NOTE:
The Contractor shall verify all controlling field dimensions before ordering or fabricating any material.

EROSION CONTROL PLAN

SCALE 1"=10'

EC-5

RELATIVE BORDER SCALE IS IN INCHES 0 1 2 3

$FILEABBREV

SHEET NAME:

DRAWING NAME:

DOKKEN ENGINEERING
110 Blue Ridge Road, Suite 200
Moncks Corner, SC 29461
Ph: 843.761.8360 Fax: 843.761.8360

DATE	REVISION	BY

PROJECT ENGINEER: ERIC ESPINOZA

COUNTY OF SANTA CRUZ – DEPARTMENT OF PUBLIC WORKS

EUREKA CANYON – PM 5.33
STORM DAMAGE REPAIR PROJECT

DRAWN: K. MOE
CHECKED: R. GRIGGS
DATE: 2/20/25
SCALE: AS NOTED
JOB NO. P76732

The County or its officers or agents shall not be responsible for the accuracy or completeness of electronic copies of this plan sheet.

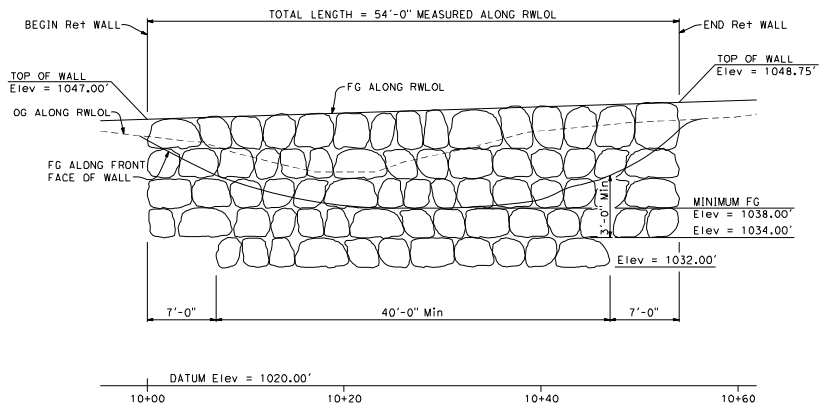

ELEVATION

1" = 5'

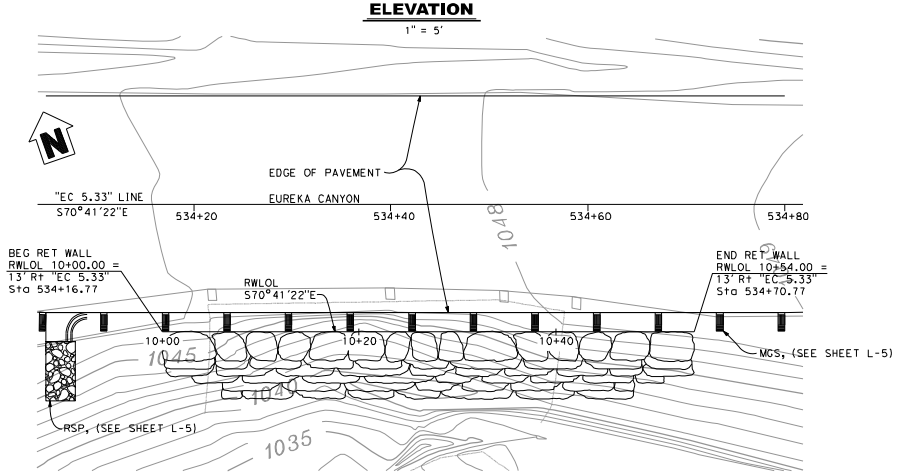

PLAN

1" = 5'

NOTE:
The Contractor shall verify all controlling field dimensions before ordering or fabricating any material.

GENERAL NOTES

DESIGN: AASHTO LRFD Bridge Design Specifications, 8th edition with California Amendments, Preface dated November 2019.

Rockery Design and Construction Guidelines FHWA-CFL/TD-06-006. Dated November 2006

Standard Plans and Specifications, 2024 edition with Revised Standard Plans, dated Oct 2024.

LIVE LOAD: 240 psf equivalent to 2 feet soil weight

SEISMIC PARAMETERS: Kh = 0.2

SOIL PARAMETERS: (For determination of Design Lateral Earth Pressures)
Backfill soil weight = 120 lb/ft³
Friction Angle = 34°
Active Pressure coefficent, Ka = 0.21

DOKKEN ENGINEERING
110 BLUE RIDGE ROAD, SUITE 200
MORGAN HILL, CA 95037
PH: 510-450-6041 FAX: 510-450-6045

QUANTITIES

Item	Total
STRUCTURE EXCAVATION (RETAINING WALL)	235 CY
STRUCTURE BACKFILL (RETAINING WALL)	34 CY
6" CRUSHED ROCK	55 CY
ROCKERY RETAINING WALL	191 CY
TYPE 1-B NON-WOVEN GEOTEXTILE	116 SQYD
TEMPORARY SHORING	1 LS

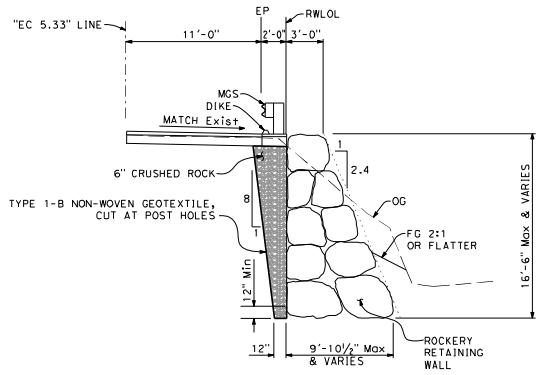

TYPICAL SECTION

¼" = 1'-0"

GENERAL PLAN

S-16

REVISION	DATE	BY

PROJECT ENGINEER: ROSA GRIGGS

COUNTY OF SANTA CRUZ – DEPARTMENT OF PUBLIC WORKS

EUREKA CANYON ROAD – PM 5.33
STORM DAMAGE REPAIR PROJECT

DRAWN: G. MORALES
CHECKED: N. ORTIGOZA
DATE: 2/20/2025
SCALE: AS NOTED
JOB NO. P76732
SHEET 50 OF 51

RELATIVE BORDER SCALE IS IN INCHES 0 1 2 3
$FILEABBREV
SHEET NAME:
DRAWING NAME:

The County or its officers or agents
shall not be responsible for the accuracy or
completeness of electronic copies of this plan sheet.

NOTES:

1. Facing rocks must be placed in accordance with the Caltrans Standard Specification Section 72-2.03 'METHOD A PLACEMENT.' Each stone must be individually placed by equipment suitable for lifting, manipulating, and placing stones of the size and shape specified. Placing efforts must ensure that each stone is firmly set and supported by underlying materials and adjacent stones. Loose stones must be repositioned or replaced.
2. Widths of facing rocks must be determined according to the specified base rock width and face batter.
3. A maximum tolerance of 6" may be applied toward the total base rock width. Do not consecutively place base rocks with widths less than 'W'.
4. Place all rocks so that their height dimension is not greater than their width.
5. Place all rocks so that their longest dimension is perpendicular to the face of the rockery wall. The second largest rock dimension must be placed parallel to the RWLOL. The smallest rock dimension must be the vertical dimension.
6. Use angular, indurate, and non-fractured rocks.
7. Voids between rocks that are greater than 6" must be chinked.
8. Cap rocks must be a minimum of 200 pounds and non-movable by hand. Cap rocks that do not meet these minimum requirements shall be grouted in place.
9. Excavate cut slopes to a stable configuration per OSHA requirements. Remove loose soil from cut slopes prior to placing filter fabric and rock facing. Stability of temporary cut slopes is the responsibility of the contractor. In any case temporary cut slopes should not be cut steeper than approved by the geotechnical engineer.
10. The front-most bearing points for each facing rock should be within 6" of the average face of the rockery wall.
11. Place all rocks such that the tops of the rocks are sloped back at least 5% towards the backdrain of the rockery wall.
12. Each facing rock must bear on at least two other rocks.
13. Rocks with shapes that create voids with linear dimensions greater than 12" shall be placed elsewhere to obtain better fit.
14. Chinking rocks should not be moveable by hand and should be grouted in place if necessary. Grout should not be visible from face of rockery wall.

NOTE:
The Contractor shall verify all controlling field dimensions before ordering or fabricating any material.

ROCKERY WALL SCHEDULE

TOTAL HEIGHT (Ft)	Min TOP WIDTH (Ft)	Min BASE WIDTH "W" (Ft)
4'	3'	4'-8"
6'	3'	5'-6"
8'	3'	6'-4"
10'	3'	7'-2"
12'	3'	8'-0"
14'	3'	8'-10"
15'	3'	9'-3"
16'	3'	9'-8"
16'-6"	3'	9'-10 ½"

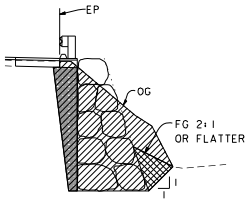

LIMITS OF PAYMENT FOR EXCAVATION AND BACKFILL
NO SCALE

LEGEND:
- STRUCTURE BACKFILL (RETAINING WALL)
- STRUCTURE EXCAVATION (RETAINING WALL)

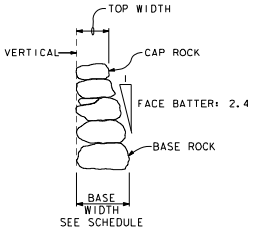

ROCK STACKING DETAIL
NO SCALE

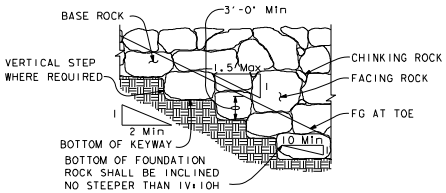

BASE ROCK PLACEMENT DETAIL (SLOPE FOOTING)
NO SCALE

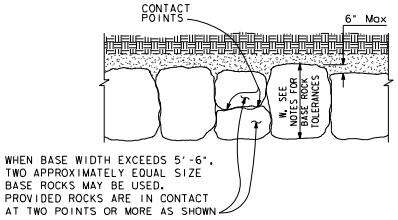

BASE ROCK PLACEMENT DETAIL (LEVEL FOOTING)
NO SCALE

DOKKEN ENGINEERING
110 BLUE ALVARO ROAD, SUITE 200
SAN LORENZO, CALIFORNIA 95580
PH: 510-430-0400 FAX: 510-430-0405

RETAINING WALL DETAILS
S-17

RELATIVE BORDER SCALE IS IN INCHES 0 1 2 3 | $FILEABBREV | SHEET NAME: | DRAWING NAME:

DATE	REVISION	BY

REGISTERED PROFESSIONAL ENGINEER
PHILLIP J. MOSER
No. 3453
Exp. 6-30-26
CIVIL
STATE OF CALIFORNIA

PROJECT ENGINEER
ROSA GRIGGS

COUNTY OF SANTA CRUZ – DEPARTMENT OF PUBLIC WORKS
EUREKA CANYON ROAD – PM 5.33
STORM DAMAGE REPAIR PROJECT

DRAWN: G. MORALES
CHECKED: N. ORTIGOZA
DATE: 2/20/2025
SCALE: AS NOTED
JOB NO. P76732
SHEET
51 OF 51